DUDLEY KNOX LIBRARY
NAVAL POSTGRADUATE SCHOOL
MONTEREY, CALIFORNIA 93943

DEPARTMENT OF OCEAN ENGINEERING

MASSACHUSETTS INSTITUTE OF TECHNOLOGY

CAMBRIDGE, MASSACHUSETTS 02139

TORSIONAL BUCKLING OF I BEAM AND FLAT BAR STIFFENERS UNDER COMBINED LATERAL AND AXIAL LOADING

by

Glenn E. Klein, Jr.

SM (NA&ME)
SM (ME)

Course XIII-A
June 1985

T224199

TORSIONAL BUCKLING OF I BEAM AND FLAT BAR STIFFENERS UNDER COMBINED LATERAL AND AXIAL LOADING

by

GLENN E. KLEIN, JR.

B.S., UNITED STATES NAVAL ACADEMY
(1973)

Submitted to the Department of
Ocean Engineering
in Partial Fulfillment of the
Requirements of the Degrees of

MASTER OF SCIENCE IN NAVAL ARCHITECTURE AND MARINE ENGINEERING

and

MASTER OF SCIENCE IN MECHANICAL ENGINEERING

at the

© MASSACHUSETTS INSTITUTE OF TECHNOLOGY

June 1985

The author hereby grants to the United States Government and its agencies permission to reproduce and to distribute copies of this thesis document in whole or in part.

Thesis
K57545
c.1

DUDLEY KNOX LIBRARY
NAVAL POSTGRADUATE SCHOOL
MONTEREY CA 93943-5101

TORSIONAL BUCKLING OF I BEAM AND FLAT BAR STIFFENERS UNDER COMBINED LATERAL AND AXIAL LOADING

by

GLENN E. KLEIN, JR.

Submitted to the Department of Ocean Engineering on May 10, 1985 in partial fulfillment of the requirements for the Degrees of Master of Science in Naval Architecture and Marine Engineering and Master of Science in Mechanical Engineering.

ABSTRACT

The prediction of torsional buckling of stiffeners is a necessary design skill in the planning of any framed structure or vehicle. The likelihood of torsional failure is increased when the stiffener is simultaneously loaded from perpendicular directions, a common loading condition for the frames of a ship at sea. This thesis examines first the case of a single lateral load on I beam and flat bar stiffeners and then the instance of combined lateral and axial loadings. An energy method is used and formulated are expressions for the critical buckling load for a single laterally applied force and a formula

relating lateral and axial loads and giving an indication of the relative weakening of a stiffener caused by simultaneous application of both forces.

Thesis Supervisor: Dr. P.C. Xirouchakis

Thesis Reader: Dr. J.H. Williams, Jr.

TABLE OF CONTENTS

Abstract 2
Table of Contents 4
Notations 6
List of Figures 8
List of Tables 9
Introduction 10

CHAPTERS

1. Description of Models 12
1.1 Model I 14
1.2 Model II 16

2. Model I - Torsional Buckling Under Point Lateral Loading 18
2.1 Development of the Strain Energy Equation 18
2.2 Development of the Virtual Work Equation 20
2.3 Determination of the Critical Buckling Load 23

3. Model II - Torsional Buckling Under
Point Lateral Loading 27

3.1 Development of the Strain Energy Equation 27
3.2 Development of the Virtual Work Equation 29
3.3 Determination of the Critical Buckling Load 29

4. Models I and II - Torsional Buckling Under Combined Lateral and Axial Point Loading 32
4.1 Description of Loading Condition 32
4.2 Development of the Strain Energy Equation 34
4.3 Development of the Work Equation 39
4.4 Determination of the Critical Buckling Load Equation ..44

5. Evaluation of Results of the Buckling Load Equation 46
5.1 Nondimensionalization of the Buckling Load Equation 46
5.2 Model I - Effects of Varying Stiffener Dimensions on the Value of the Critical Buckling Load 48
5.3 Model II - Effects of Varying Stiffener Dimensions on the Value of the Critical Buckling Load .57

6. Conclusions 62

Appendix A 65

References 71

NOTATIONS

a	Length of stiffener
b	Breadth of I beam flange
B	Angle of rotation of stiffener in the YZ plane
Bo	Amplitude of cosine function for B
c	Height of stiffener shear center above toe
Cw	Warping Constant
d	Additional lowering of the load P due to the load being applied a distance h/2 above center of the web
E	Young's Modulus = 2.068×10^8 KN/m
G	Shear Modulus = E/2.6
h	Height of stiffener
Iz	Moment of inertia of stiffener about web plane
j,k,ℓ	Local rectangular coordinates at any point x on a stiffener
J	St. Venant's torsion constant
L	Dimensionless parameter
$M\ell$	Moment about the ℓ axis
P	Lateral load
Pcr	Critical lateral buckling load
Q	Axial end load
Qe	Euler buckling load

tf	Flange thickness
tw	Web thickness
u,v,w	Displacements in the x,y, and z directions
U	Strain energy
W	Work
x,y,z	Rectangular coordinates originating at centroid of stiffener
γ	Numerical factor
ε	Membrane strain
ν	Poisson's Ratio

LIST OF FIGURES

1-1 Coordinate System.....12

1-2 Characteristics of Torsional Buckling.....13

1-3 Model I Lateral Cross Section.....14

1-4 Model II Flat Bar Stiffener.....16

1-5 Model II Lateral Cross Section.....16

2-1 I Beam Under Point Lateral Load.....18

2-2 Model I showing arbitrary point x with force acting to the right.....19

2-3 Additional lowering of P due to load being applied a distance h/2 above centroid.....22

2-4 Agreement of calculated values of δ with tabular values listed in reference (1).....26

-1 Combined Lateral and Axial Loading of a Stiffener.....32

-2 Hogging and Sagging Conditions in Large Waves.....33

-3 Additional moment -Qv provided by axial loading.....35

-4 Motion of force Q through distance -u.....40

-1 Euler Buckling of a Beam.....47

-2 Pcr/Qe vs Q/Qe for I beam varying h/a.....50

-3 Pcr/Qe vs Q/Qe for I beam varying h/tw.....51

-4 Pcr/Qe vs Q/Qe for I beam varying b/tf.....52

-5 Pcr/Qe vs Q/Qe for I beam varying tf/tw.....53

-6 Pcr/Qe vs Q/Qe for flat bar varying h/a.....58

LIST OF TABLES

5-1 Comparison of values for Pcr/Qe at Q/Qe = 0 for an I beam as calculated by equation (5-2) of this thesis versus values calculated by equations (2-5) and (6-18) of reference (1) 56

5-2 Comparison of values for Pcr/Qe at Q/Qe = 0 for a flat bar as calculated by equation (5-2) of this thesis versus values calculated by equation (6-37) of reference (1) 60

INTRODUCTION

As is the case with most large engineering structures, a ship's hull and its interior dividing bulkheads and decks are basically framework patterns of stiffeners covered by an outer shell. It is principally this lattice of stiffeners which determines the strength and structural stability of a vessel. Structural soundness and integrity are particularly critical for a ship because this engineering structure must operate in what can be the harshest natural environment on earth. Very seldom are the frames of a ship's hull subject to loading in a single plane; rather, it is most often a combination of loads caused by the interaction of the various natural and man-made forces from different directions which determine the total stress on a member. The subject of this thesis is to develop an expression relating the interaction of simultaneous lateral and axial loading of a stiffener.

Two of the more commonly found shipboard stiffeners, the I beam and flat bar type, will be examined first under the action of a centrally applied lateral load and then under the combined actions of the central lateral load and a perpindicularly applied end axial load. Concentrated point loads were chosen because they represent the most limiting and potentially dangerous cases. An energy approach will be used in all instances. First the strain energy of the system will be found and then the work done by the loading forces. By conservation

of energy, the variation of the strain energy will be equated to the work done. From the resulting expression will be developed, in the case of the single lateral load, a formula for the critical buckling load and, in the case of combined loading, a formula relating the interaction of the lateral and axial forces.

It is hoped that study into the problem of stiffener failure under more realistic loading conditions such as this may aid in the formulation and upgrading of design codes used in civilian and military ship design, and any efforts that could make a ship safer or lighter would certainly be worthwhile. To this end it is hoped that the ultimate contribution of this thesis is a reasonably accurate method of predicting, given a value of axial load, how much lateral load may be sustained by a stiffener without buckling, or vice versa.

CHAPTER 1

DESCRIPTION OF MODELS

The two types of strengthening members that will be considered are the I beam type and flat bar type, to be known respectively as Model I and Model II. The coordinate system to be employed with both models is shown in figure (1-1).

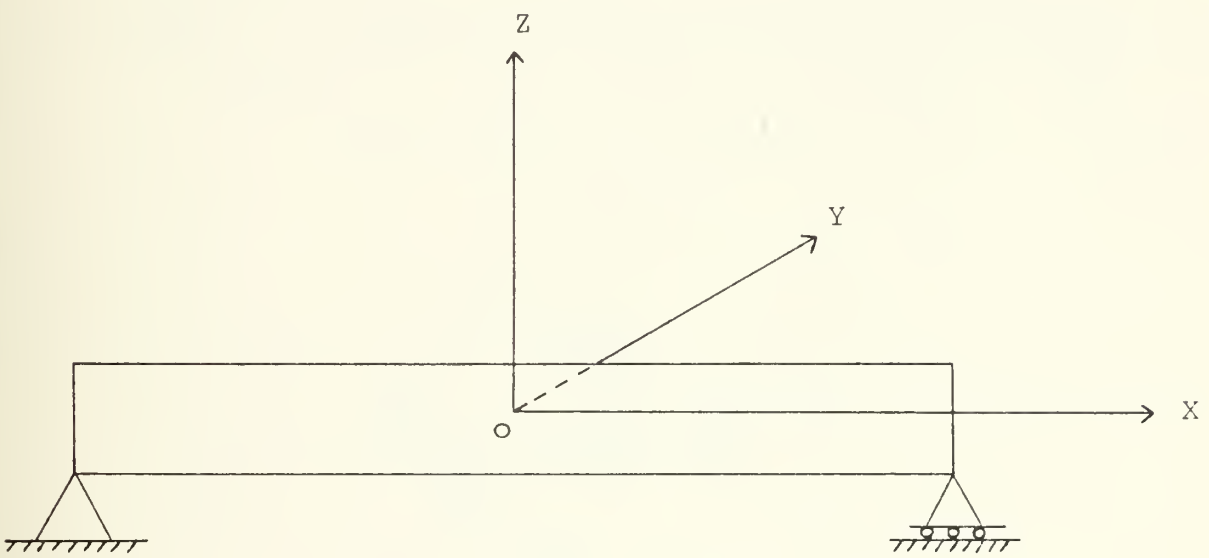

Figure (1-1) Coordinate System

The origin of the coordinate system will be taken at the center of the beam, with u,v, and w being the displacements along the x, y,

and z axes. The deflections will be positive in the direction of the axes shown in figure (1-1).

Torsional buckling is that failure mode characterized by a deflection and twisting of the stiffener in the YZ plane. This type of deformation is shown in figure (1-2).

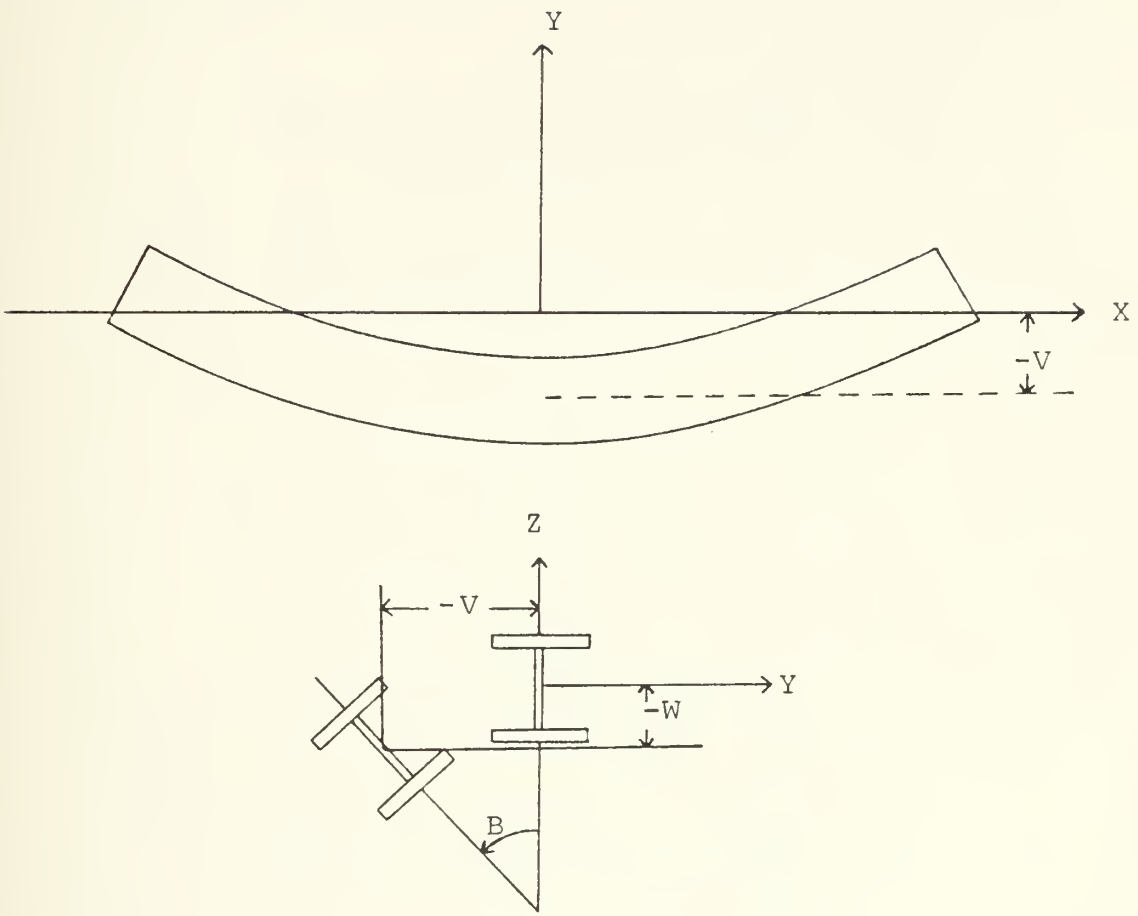

Figure (1-2) Characteristics of Torsional Buckling

1.1 Model I

Model I as stated has been chosen to be a simply supported I beam. The case of a beam with symmetric flanges will be considered, and a lateral cross section of Model I is shown in figure (1-3).

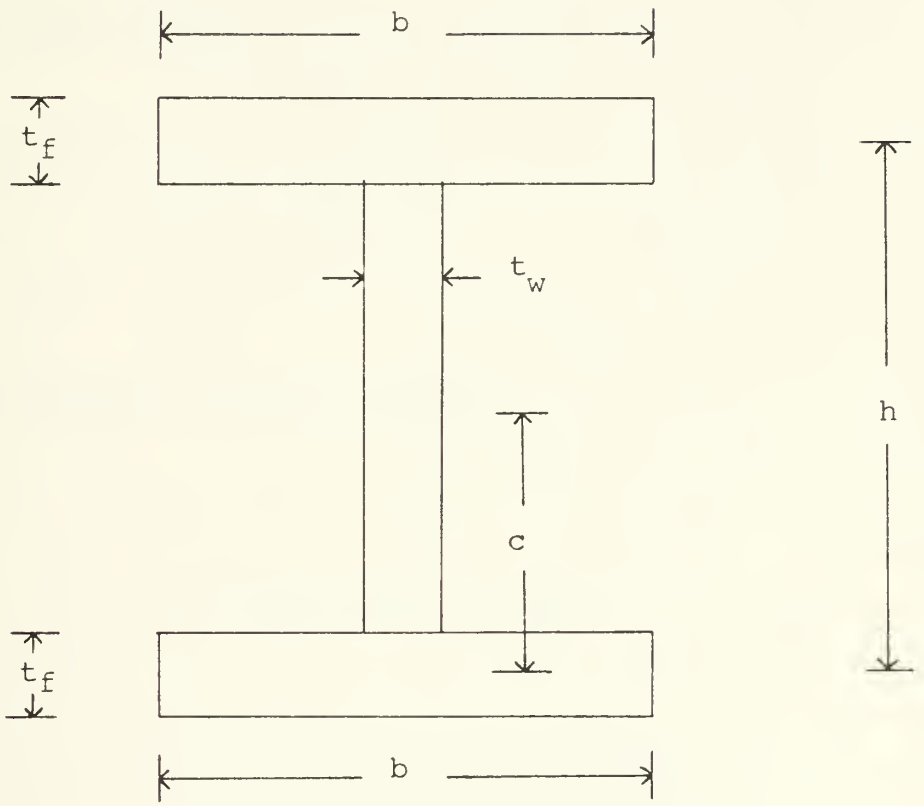

Figure (1-3) Model I Lateral Cross Section

The properties of the Model I cross section are listed below:

c - Height of shear center above toe (Flange thickness t,f considered negligible compared to web height h)

$$c = \frac{h}{2}$$

Cw - Warping constant

$$Cw = \frac{t_f \, h^2 \, b^3}{24}$$

J - St. Venant's torsion constant

$$J = \frac{1}{3}(2bt_f^3 + ht_w^3)$$

Iz - Moment of inertia about the web plane (contribution of top and bottom flanges only)

$$Iz = 2\left(\frac{b^3 t_f}{12}\right)$$

1.2. Model II

Model II is the flat bar type stiffener as shown in figures (1-4) and (1-5).

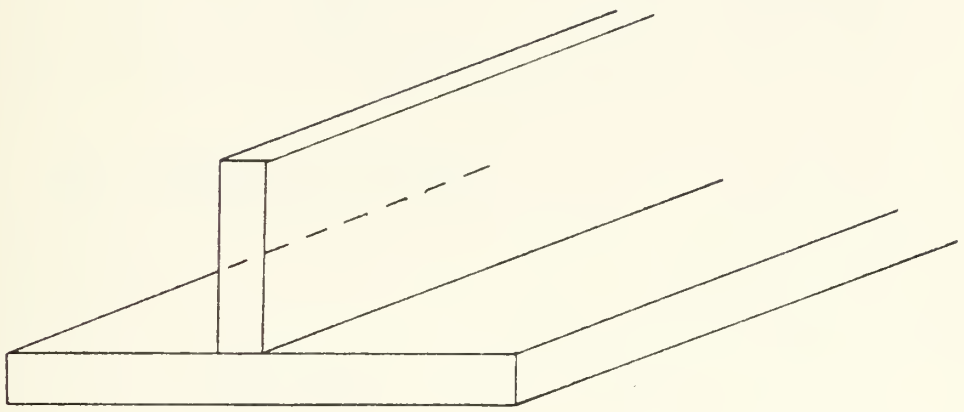

Figure (1-4) Model II - Flat Bar Stiffener

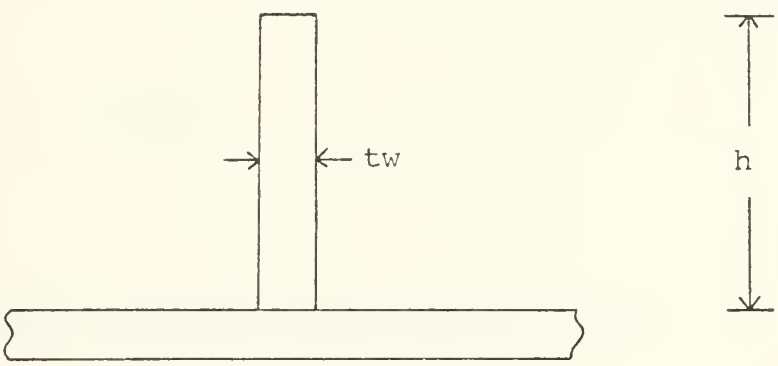

Figure (1-5) Model II Lateral Cross Section

The properties of the flat bar cross section are as follows:

c - Height of shear center above toe

$$c = \frac{h}{2}$$

Cw - Warping Constant

$$Cw = 0$$

J - St. Venant's torsion constant

$$J = \frac{htw^3}{3}$$

I_z - Moment of inertia about the web plane

$$Iz = \frac{htw^3}{12}$$

CHAPTER 2

Model I - TORSIONAL BUCKLING UNDER POINT LATERAL LOADING

2.1 Development of the Strain Energy Equation

The case of a simply supported I beam of length a subjected to a point lateral load P in the center is illustrated in figure (2-1)

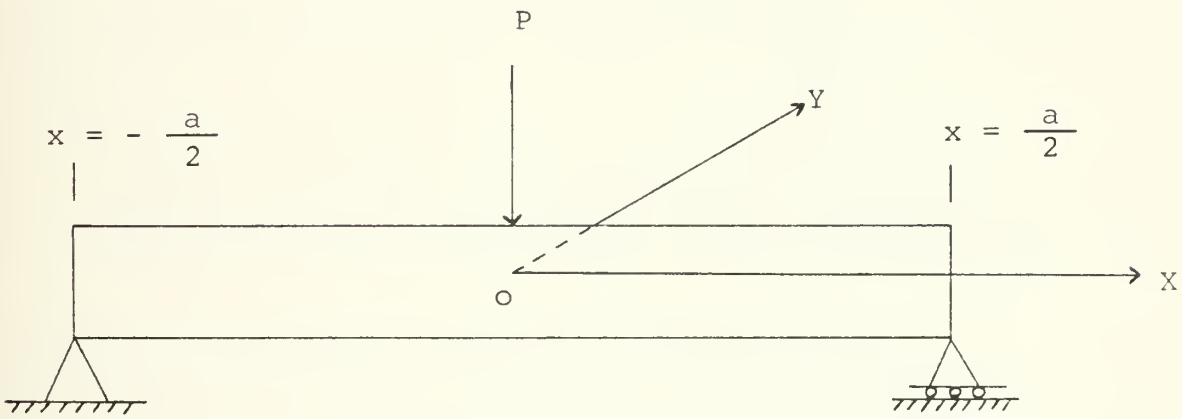

Figure (2-1) I Beam Under Point Lateral Load

The general equation for the strain energy of a beam of length a under bending and torsion is given by (refernce 1):

$$U = \int_{o}^{a/2} \left[EI_z \left(\frac{d^2 v}{dx^2} \right)^2 + GJ \left(\frac{dB}{dx} \right)^2 + E\,Cw \left(\frac{d^2 B}{dx^2} \right)^2 \right] dx$$

Considering only that portion of the beam to the right of an arbitrary point x, figure (2-2), the forces acting will be a single one P/2 in magnitude acting at x = a/2. If a local coordinate system with axes j, k, ℓ is assigned to the point x, the force P/2 will produce a moment about the ℓ axis equal to:

$$M_\ell = \frac{P}{2}(a/2 - x)B \qquad (2\text{-}1)$$

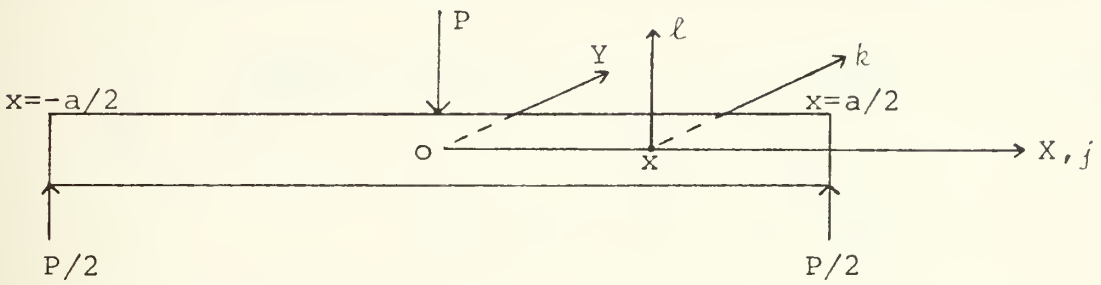

Figure (2-2) Model I showing arbitrary point x with force P/2 acting to the right a distance a/2 - x

Where B again is the angle of twist indicated in figure (1-2). It should be noted that B is assumed to be sufficiently small so that small angle approximations for sine and cosine are applicable.

The expression for $\frac{d^2v}{dx^2}$ then is (reference 1):

$$\frac{d^2v}{dx^2} = \frac{M_\ell}{EI_z}$$

For B the simple choice $B = Bo \cos \frac{\pi x}{a}$ will be made. The cosine expression is selected because it is assumed that the stiffener will be mounted such that it is restrained from twisting at the ends x = a/2 and x = -a/2. This is a reasonable assumption in the case of stiffeners fixed between decks or frames of a ship.

Utilyzing the appropriate terms for M_ℓ and B, $\frac{d^2v}{dx^2}$ becomes:

$$\frac{d^2v}{dx^2} = \frac{P}{2EI_z} \left(\frac{a}{2} - x \right) Bo \cos \frac{\pi x}{a} \qquad (2\text{-}2)$$

Inserting this expression into the formula for strain energy U yields:

$$U = \int_o^{a/2} \left[\frac{P^2 Bo^2}{4EI_z} \cos^2 \frac{\pi x}{a} \left(\frac{a}{2} - x \right)^2 + GJ \left(\frac{Bo\pi}{a} \right)^2 \sin^2 \frac{\pi x}{a} + ECw\, Bo^2 \left(\frac{\pi}{a} \right)^4 \cos^2 \frac{\pi x}{a} \right] dx$$

Carrying out the integration it becomes:

$$U = \frac{P^2 Bo^2}{EI_z} a^3 \left(\frac{6 + \pi^2}{192\pi^2} \right) + GJ \left(\frac{Bo\pi}{a} \right)^2 \frac{a}{4} + ECw\, Bo^2 \left(\frac{\pi}{a} \right)^4 \frac{a}{4}$$

2.2 Development of the Virtual Work Equation

Work is defined as the movement of a force through a distance. In the case of Model I then the virtual work done is obtained by multiplying the force P times the summation of all the components of

motion in the Z direction for elements of the beam between x = 0 and x = a/2. It is not necessary to sum vertical components over the entire length of the beam, x = -a/2 to x = a/2 , because each half moves the same total distance. The expression for the vertical distance moved by the centroid of a cross section of the beam at the arbitrary point X is (reference 1):

$$B \frac{d^2v}{dx^2} \left(\frac{a}{2} - x \right)$$

and the work equation then becomes:

$$W = P \int_0^{a/2} B \frac{d^2v}{dx^2} \left(\frac{a}{2} - x \right) dx$$

This equation would suffice alone if the force P were applied at the centroid of the cross section at X = 0; but since we are considering the more realistic case where the load is applied at the outside surface of the beam, a distance h/2 above the centroid, the expression must be slightly ammended. Due to the twist of the section at X=0, the load will drop through an additional distance $d = h/2(1 - \cos B_{x=0})$ as shown in figure (2-3).

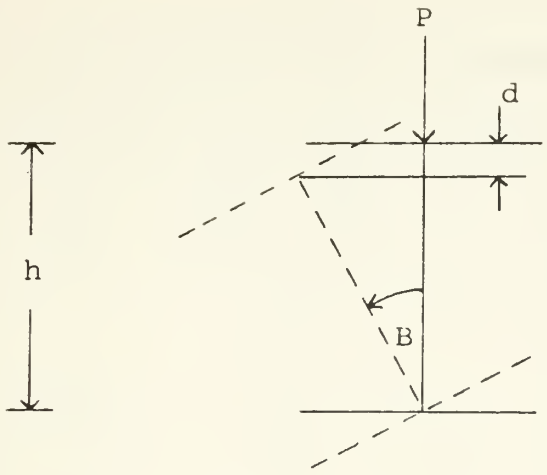

Figure (2-3) Additional lowering of P due to load being applied a distance h/2 above centroid

By the half angle relation,

$$1 - \cos B_{x=o} = 2 \sin^2 B_{x=o}/2$$

$$\simeq 2(B_{x=o}/2)^2$$

$$= B^2_{x=o}/2$$

Therefore d becomes approximately:

$$d \simeq (h/2)\ (B^2_{x=o}/2)$$

$$= (h/4)\ Bo^2 \cos^2 0$$

$$= (h/4)\ Bo^2$$

This term is now multiplied by P and added to the work equation to give a more accurate expression for the work done.

$$W = P \int_o^{a/2} B \frac{d^2v}{dx^2} \left(\frac{a}{2} - x \right) dx + \frac{Ph}{4} Bo^2 \qquad (2\text{-}3)$$

$$= P \int_o^{a/2} Bo \cos \frac{\pi x}{a} \left(\frac{d^2v}{dx^2} \right) \left(\frac{a}{2} - x \right) dx + \frac{Ph}{4} Bo^2$$

Again $\frac{d^2v}{dx^2} = \frac{P}{2EI_z} \left(\frac{a}{2} - x \right) B$, and when applied the work equation becomes:

$$W = \frac{P^2 Bo^2}{2EI_z} \int_o^{a/2} \cos^2 \frac{\pi x}{a} \left(\frac{a}{2} - x \right)^2 dx + \frac{Ph}{4} Bo^2$$

Integrating this expression gives:

$$W = \frac{P^2 Bo^2}{EI_z} a^3 \left(\frac{6 + \pi^2}{96\pi^2} \right) + \frac{Ph}{4} Bo^2$$

2.3 Determination of the Critical Buckling Load

To determine the value of P that will cause failure of the stiffener, the critical buckling load Pcr, the principle of conservation of energy will be employed. This concept states that

when a member is gradually loaded, the kinetic energy is zero and the work done by external forces is equal to the strain energy (reference 2):

$$\delta W = \delta U$$

To determine δW and δU calculus of variations with respect to Bo is applied to the work and strain energy equations. First to the work equation:

$$W(Bo + \delta Bo) = (Bo + \delta Bo)^2 \left[\frac{P^2 a^3}{EI_z} \left(\frac{6 + \pi^2}{96\pi^2} \right) + \frac{Ph}{4} \right]$$

$$= W(Bo^2) + 2Bo\delta Bo \left[\frac{P^2 a^3}{EI_z} \left(\frac{6 + \pi^2}{96\pi^2} \right) + \frac{Ph}{4} \right]$$

$$\delta W = 2Bo\delta Bo \left[\frac{P^2 a^3}{EI_z} \left(\frac{6 + \pi^2}{96\pi^2} \right) + \frac{Ph}{4} \right]$$

And in like manner to the strain energy equation:

$$U(Bo+\delta Bo) = (Bo+\delta Bo)^2 \left[\frac{P^2 a^3}{EI_z} \left(\frac{6+\pi^2}{192\pi^2} \right) + GJ \left(\frac{\pi}{a} \right)^2 \frac{a}{4} + ECw \left(\frac{\pi}{a} \right)^2 \frac{a}{4} \right]$$

$$= U(Bo)^2 + Bo\delta Bo \left[\frac{P^2 a^3}{EI_z} \left(\frac{6 + \pi^2}{192\pi^2} \right) + \frac{\pi^2}{4a} \left(GJ + ECw \left(\frac{\pi}{a} \right)^2 \right) \right]$$

$$\delta U = 2Bo\delta Bo \left[\frac{P^2 a^3}{EI_z} \left(\frac{6+\pi^2}{192\pi^2} \right) + \frac{\pi^2}{4a} \left(GJ + ECw \left(\frac{\pi}{a} \right)^2 \right) \right]$$

The two variational expressions may now be equated, and the formula for the critical buckling load derived.

$$\delta W = \delta U$$

$$2Bo\delta Bo\left[\frac{Pcr^2a^3}{EI_z}\left(\frac{6+\pi^2}{96\pi^2}\right)+\frac{Pcrh}{4}\right] =$$

$$2Bo\delta Bo\left[\frac{Pcr^2a^3}{EI_z}\left(\frac{6+\pi^2}{192\pi^2}\right)+\frac{\pi^2}{4a}\left(GJ+ECw\left(\frac{\pi}{a}\right)^2\right)\right]$$

$$\frac{Pcr^2a^3}{EI_z}\left(\frac{6+\pi^2}{192\pi^2}\right)+\frac{Pcr\,h}{4}-\frac{\pi^2}{4a}\left[GJ+ECw\left(\frac{\pi}{a}\right)^2\right]=0$$

This quadratic may be solved for Pcr, and the result expressed in the form:

$$Pcr=\left\{-\left(\frac{24\pi^2}{6+\pi^2}\right)\frac{h}{a}\sqrt{\frac{EI_z}{GJ}}+\frac{1}{2}\left[\left(\frac{48\pi^2}{6+\pi^2}\right)^2\left(\frac{h}{a}\right)^2\frac{EI_z}{GJ}+\left(\frac{192\pi^4}{6+\pi^2}\right)\left(1+\frac{ECw}{GJ}\left(\frac{\pi}{a}\right)^2\right)\right]^{1/2}\right\}\frac{\sqrt{EI_zGJ}}{a^2} \qquad (2\text{-}4)$$

This formula corresponds directly with equation (6-18) of reference 1 for similar geometry and loading which, in the notation of this thesis, is:

$$Pcr=\frac{\gamma\sqrt{EI_zGJ}}{a^2}$$

The expression within braces in equation (2-4) equates to the non-dimensional factor γ of (2-5). Figure (2-4) shows the close agreement between the values of γ calculated from equation (2-4) with those listed in tabular form in Table 6-5 of reference 1.

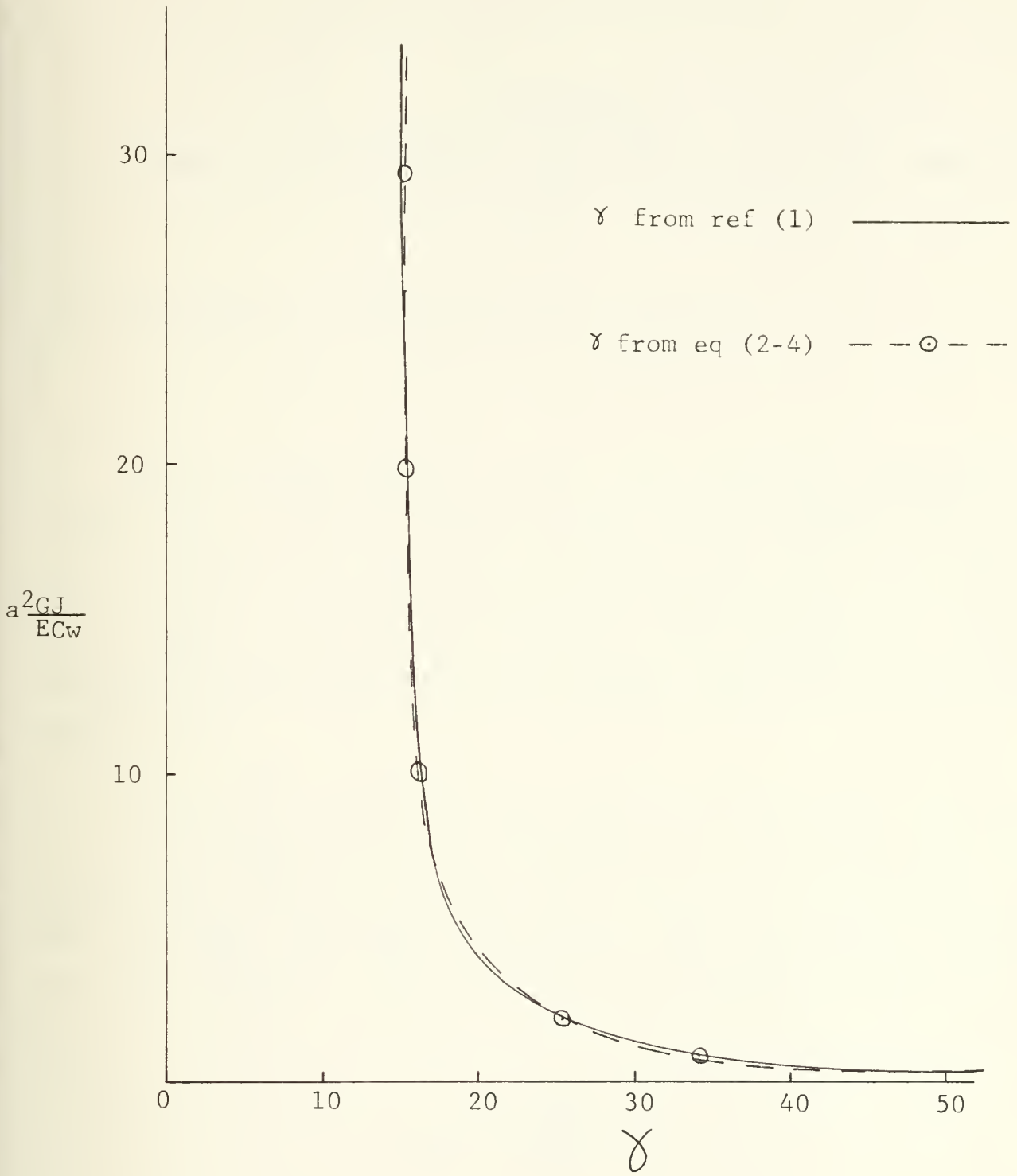

Figure (2-4) Agreement of calculated values of γ from eq (2-4) with tabular values listed in reference (1)

CHAPTER 3

MODEL II - TORSIONAL BUCKLING UNDER POINT LATERAL LOADING

3.1 Development of the Strain Energy Equation

Model II again was the flat bar type stiffener illustrated in figure (1-4). In this chapter the same type of loading situation as that of chapter 2, a point load coincident with the Z axis and applied at the upper surface of the stiffener, will be examined. A pictorial representation of the loading will appear identical to that shown in figure (2-1).

The equation for the strain energy of a flat bar in lateral bending and torsion can be obtained in exactly the same manner as that for the I beam. The only difference is that the warping rigidity term, Cw, vanishes. This is because the equation for Cw of an I beam is:

$$Cw = \frac{t_f h^2 b^3}{24}$$

and the flat bar stiffener can be likened to an I beam with the width b of the top and bottom flanges equal to zero. The strain energy expression then is:

$$U = \int_o^{a/2} \left[EI_z \left(\frac{d^2v}{dx^2}\right)^2 + GJ \left(\frac{dB}{dx}\right)^2 \right] dx$$

The simple choice for B, $Bo \cos \frac{\pi x}{a}$, is again made and the expression for $\frac{d^2v}{dx^2}$ is then identical to (2-1):

$$\frac{d^2v}{dx^2} = \frac{P}{2EI} \left(\frac{a}{2} - x \right) Bo \cos \frac{\pi x}{a}$$

The complete strain energy equation is:

$$U = \int_o^{a/2} \left[\frac{P^2 Bo^2}{4EI_z} \cos^2 \frac{\pi x}{a} \left(\frac{a}{2} - x \right)^2 + GJ \left(\frac{Bo\pi}{a} \right)^2 \sin^2 \frac{\pi x}{a} \right] dx$$

which when integrated becomes:

$$U = \frac{P^2 Bo^2}{4EI_z} a^3 \left(\frac{6 + \pi^2}{192\pi^2} \right) + GJ \left(\frac{Bo\pi}{a} \right)^2 \frac{a}{4}$$

3.2 Development of the Virtual Work Equation

The work equation is found again by defining the work done as the product of the load P times the summation of all vertical components of motion over one half of the bar. The expression for the vertical distance moved by the centroid at any point along the X axis is identical to the I beam case:

$$B \quad \frac{d^2v}{dx^2} \quad (\frac{a}{2} - x)$$

Also, a correction term must once more be added to the work equation to account for the load being applied at the upper surface of the plate rather than at the centroid. The ultimate result is that the work equations for model I and model II are identical:

$$W = \frac{P^2 Bo^2}{2EI_z} \int_0^{a/2} \cos^2 \frac{\pi x}{a} \quad (\frac{a}{2} - x)^2 \, dx + \frac{Ph}{4} Bo^2$$

$$= \frac{P^2 Bo^2}{EI_z} \quad a^3 \quad (\frac{6 + \pi^2}{96\pi^2}) + \frac{Ph}{4} Bo^2$$

3.3 Determination of the Critical Buckling Load

By setting the variation of the work done equal to the variation of the strain energy the value of Pcr is once again determined. Since

the work expression for the flat plate is identical to that of the I beam, so too is the equation for the variation of the work:

$$\delta W = 2Bo\delta Bo \left[\frac{P^2 a^3}{EI_z} \left(\frac{6 + \pi^2}{96\pi^2}\right) + \frac{Ph}{4} \right]$$

While that for δU is slightly different owing to the abscence of Cw:

$$U(Bo + \delta Bo) = (Bo + \delta Bo)^2 \left[\frac{P^2 a^3}{EI_z} \left(\frac{6 + \pi^2}{192\pi^2}\right) + GJ \left(\frac{\pi}{a}\right)^2 \frac{a}{4} \right]$$

$$\delta U = 2Bo\delta Bo \left[\frac{P^2 a^3}{EI_z} \left(\frac{6 + \pi^2}{192\pi^2}\right) + GJ \left(\frac{\pi}{a}\right)^2 \frac{a}{4} \right]$$

Equating the work and strain energy and solving for Pcr yields:

$$\delta W = \delta U$$

$$2Bo\delta Bo \left[\frac{Pcr^2 a^3}{EI_z} \left(\frac{6 + \pi^2}{96\pi^2}\right) + \frac{Ph}{4} \right]$$

$$= 2Bo\delta Bo \left[\frac{Pcr^2 a^3}{EI_z} \left(\frac{6 + \pi^2}{192\pi^2}\right) + GJ \left(\frac{\pi}{a}\right)^2 \frac{a}{4} \right]$$

$$\frac{Pcr^2 a^3}{EI_z} \left(\frac{6 + \pi^2}{192\pi^2}\right) - \frac{Ph}{4} + \frac{\pi^2}{4a} GJ = 0$$

When solved this quadratic gives for Pcr an expression which may be written in a form similar to equation (2-2):

$$Pcr = \left\{ \left(\frac{24\pi^2}{6+\pi^2}\right) \frac{h}{a} \sqrt{\frac{EI_z}{GJ}} + \frac{1}{2} \left[\left(\frac{48\pi^2}{6+\pi^2}\right)^2 \left(\frac{h}{a}\right)^2 \frac{EI_z}{GJ} + \left(\frac{192\pi^4}{6+\pi^2}\right) \right]^{1/2} \right\} \sqrt{\frac{EI_z GJ}{a^2}} \qquad (3\text{-}1)$$

For typical stiffeners the quantity $\left(\frac{192\pi^4}{6+\pi^2}\right)$ will be several orders of magnitude greater than $\left(\frac{48\pi^2}{6+\pi^2}\right) \left(\frac{h}{a}\right)^2 \frac{EI_z}{GJ}$. Therefore, for purposes of a design formula it is sufficiently accurate to ignore this latter quantity and rewrite equation (3-1) as:

$$Pcr = \left[\frac{1}{2} \left(\frac{192\pi^4}{6+\pi^2}\right)^{1/2} - \left(\frac{24\pi^2}{6+\pi^2}\right) \frac{h}{a} \sqrt{\frac{EI_z}{GJ}} \right] \sqrt{\frac{EI_z GJ}{a^2}} \qquad (3\text{-}2)$$

The formula for Pcr for a flat plate stiffener subjected to a point load in the center of the span is given in reference (1) by equation (6-37), which in this thesis' notation is:

$$Pcr = 16.94 \sqrt{\frac{EI_z GJ}{a^2}} \left(1 - .87 \frac{h}{a} \sqrt{\frac{EI_z}{GJ}}\right)$$

Now to two-decimal accuracy equation (3-2) may be rewritten as:

$$Pcr = 17.16 \sqrt{\frac{EI_z GJ}{a^2}} \left(1 - .87 \frac{h}{a} \sqrt{\frac{EI_z}{GJ}}\right)$$

The formulas are in agreement within 1.3%.

CHAPTER 4

MODELS I AND II - TORSIONAL BUCKLING UNDER COMBINED LATERAL AND AXIAL POINT LOADING

4.1 Description of Loading Condition

In chapters 2 and 3 the failure by torsional buckling of a beam subject to a lateral load only has been studied; now suppose that an additional axial load is added at the ends of the beam as shown in figure (4-1).

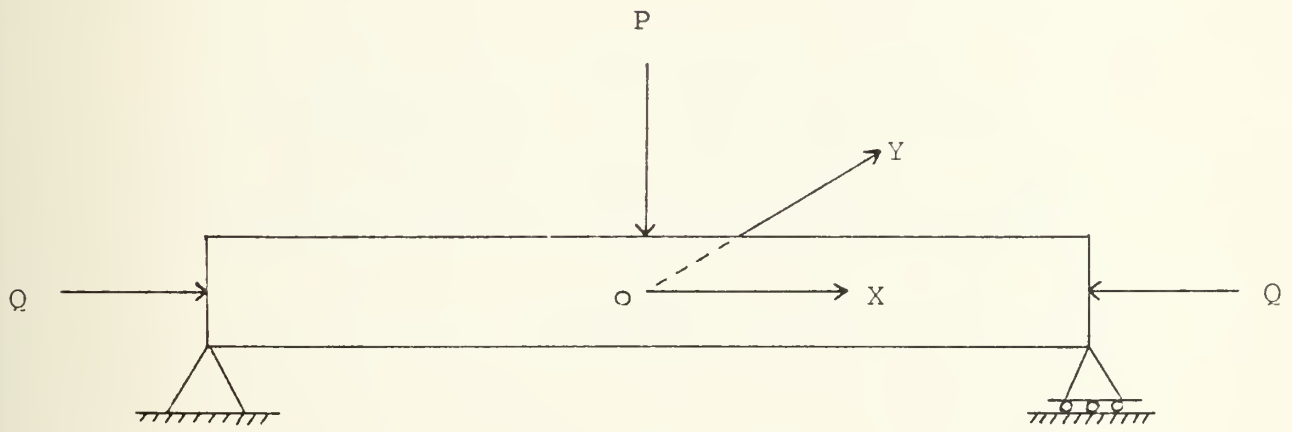

Figure (4-1) Combined Lateral and Axial Loading of a Stiffener

The stiffener is again simply supported and laterally loaded by a force P applied at the upper surface in the center of the span, but an additional force Q acts at the centroid of each end to compress the stiffener inward. The two forces are acting at right angles to each other; P along the Z axis and Q along the X axis. This dual axis type loading would seem to be much more representative of the kind of loading conditions to be encountered by the frames of a ship. For example, two commonly encountered conditions by a ship at sea in large waves are hog and sag, shown in figure (4-2).

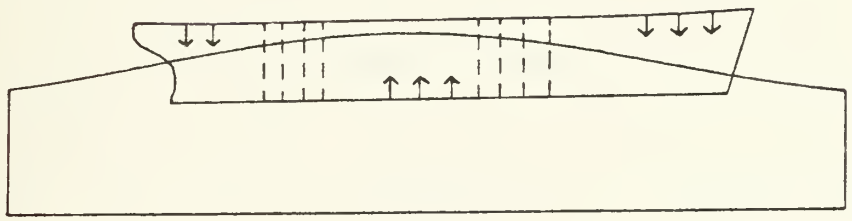

HOGGING

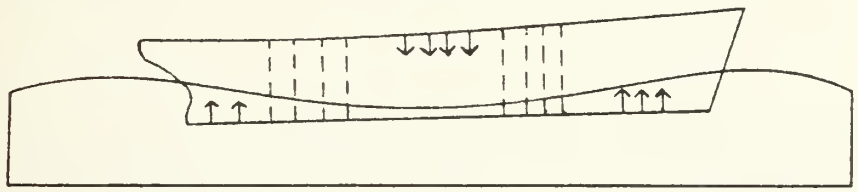

SAGGING

Figure (4-2) Hogging and Sagging Congitions in Large Waves

Here the ship is supported by the crest of a wave either amidships (hogging) or at the ends (sagging). In both cases the vertical transverse frames of the ship, a portion of which are shown as dashed lines in figure (4-2), will be placed in compression, i.e. a Q force applied. At the same time then, the sides of the ship will very likely be receiving a lateral force P from other waves in a confused sea or in a worst case from collision with another ship, floating object, or possibly from within the ship from unsecured cargo buffeting about. How do the two forces interact, and what effect does the addition of an axial force have upon the capability of the stiffener to accept a lateral load? These are the questions this thesis will attempt to answer utilizing the strain energy approach which was used in the previous chapters for a lateral load alone.

4.2 Development of the Strain Energy Equation

In solving for the strain energy of a stiffener subjected to both lateral and axial loads the case of model I, an I beam, will be considered first; so the energy equation will contain a warping rigidity term Cw:

$$U = \int_0^{a/2} \left[EI_z \left(\frac{d^2v}{dx^2}\right)^2 + GJ\left(\frac{dB}{dx}\right)^2 + EC_w \left(\frac{d^2B}{dx^2}\right)^2 \right] dx$$

Again for B, the angle of twist, the choice Bo cos $\frac{\pi x}{a}$ is made. The expression for $\frac{d^2v}{dx^2}$ will however, no longer be the same. Taking again an arbitrary point x as shown in figure (2-2), there will still be present to the right of x the force P/2 creating a moment about the local ℓ axis equal to the expression in equation (2-1):

$$M\ell = \frac{P}{2} \left(\frac{a}{2} - x \right) B \qquad (2\text{-}1)$$

There is now though, another force to the right of x adding to this moment about ℓ, the axial force Q. Looking down upon the stiffener from above it is seen that this addition to Mℓ is equal to the force Q times the lever arm -v as shown in figure (4-3):

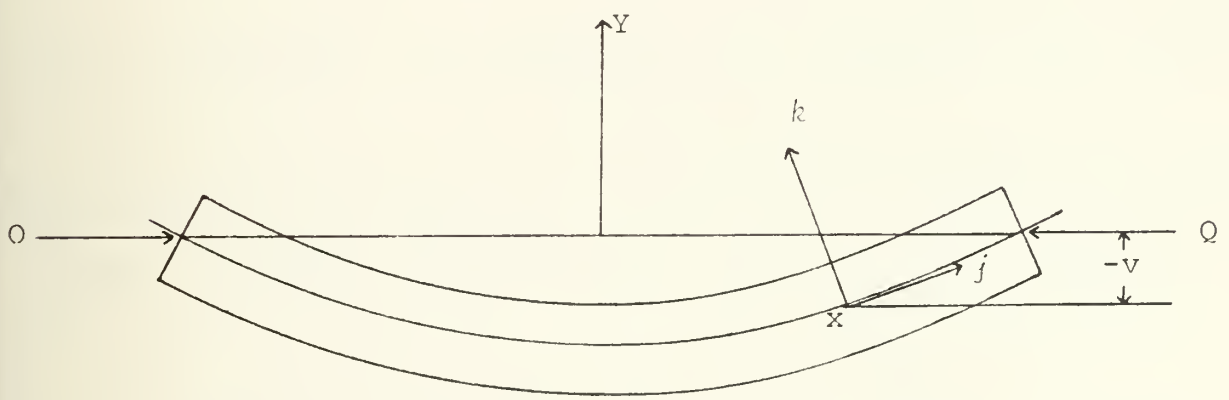

Figure(4-3) Additional moment Qv provided by axial loading

The total moment Mℓ then is now:

$$M\ell = \frac{P}{2} \left(\frac{a}{2} - x \right) B + Qv$$

and the expression for $\frac{d^2v}{dx^2}$ becomes:

$$\frac{d^2v}{dx^2} = \frac{M\ell}{EI_z}$$

$$= \frac{P}{2EI_z} \left(\frac{a}{2} - x \right) Bo \cos \frac{\pi x}{a} + \frac{Qv}{EI_z} \qquad (4\text{-}1)$$

We now have a linear second order differential equation which must be solved for v in order that the strain energy may be found. We are looking for a particular solution to this differential equation, and thus it will be of the form (reference 3):

$$Vp = C_1 \cos \frac{\pi x}{a} + C_2 \sin \frac{\pi x}{a} + C_3 x \cos \frac{\pi x}{a} + C_4 x \sin \frac{\pi x}{a} \qquad (4\text{-}2)$$

Differentiating this expression for v_p twice with respect to x yields:

$$\frac{d^2Vp}{dx^2} = \frac{\pi}{a} \left(2C_4 - \frac{\pi}{a} C_1\right) \cos \frac{\pi x}{a} - \frac{\pi}{a} \left(2C_3 + \frac{\pi}{a} C_2\right) \sin \frac{\pi x}{a}$$

$$- \left(\frac{\pi}{a}\right)^2 C_3 x \cos \frac{\pi x}{a} - \left(\frac{\pi}{a}\right)^2 C_4 x \sin \frac{\pi x}{a} \qquad (4\text{-}3)$$

If v_p is a solution to equation (4-1) the following is true:

$$\frac{d^2Vp}{dx^2} = \frac{P}{2EI_z} \left(\frac{a}{2} - x\right) Bo \cos \frac{\pi x}{a} + \frac{Q}{EI_z} \left(C_1 \cos \frac{\pi x}{a} + C_2 \sin \frac{\pi x}{a}\right.$$

$$\left. + C_3 x \cos \frac{\pi x}{a} + C_4 x \sin \frac{\pi x}{a} \right) \qquad (4\text{-}4)$$

By equating coefficients of the trigonometric functions in equations (4-3) and (4-4), four equations can be found to be solved for the four constants C_1 through C_4. They are:

$$C_1 = \frac{-a^3 PBo}{4a^2Q + 4EI_z\pi^2} \qquad C_2 = \frac{-a^3 EI_z \pi PBo}{(a^2Q + EI_z\pi^2)^2}$$

$$C_3 = \frac{a^2 PBo}{2a^2Q + 2EI_z\pi^2} \qquad C_4 = 0$$

Inserting these constants into equations (4-2) and (4-4) gives for v_p and its second derivative:

$$v_p = \left(\frac{-a^3 PBo}{4a^2Q + 4EI_z\pi^2} \right) \cos \frac{\pi x}{a} - \left(\frac{a^3 EI_z \pi PBo}{(a^2Q + EI_z\pi^2)^2} \right) \sin \frac{\pi x}{a} + \left(\frac{a^2 PBo}{2a^2Q + 2EI_z\pi^2} \right) x \cos \frac{\pi x}{a} \qquad (4\text{-}5)$$

and

$$\frac{d^2 v_p}{dx^2} = \frac{P}{2EI_z} \left(\frac{a}{2} - x \right) Bo \cos \frac{\pi x}{a} + \frac{Q}{EI_z} \left[\left(\frac{-a^3 PBo}{4a^2Q + 4EI_z\pi^2} \right) \cos \frac{\pi x}{a} - \left(\frac{a^3 EI_z \pi PBo}{(a^2Q + EI_z\pi^2)^2} \right) \sin \frac{\pi x}{a} + \left(\frac{a^2 PBo}{2a^2Q + 2EI_z\pi^2} \right) x \cos \frac{\pi x}{a} \right] \qquad (4\text{-}6)$$

$$\frac{d^2 v_p}{dx^2} = \frac{PBo}{EI_z} \cos \frac{\pi x}{a} \left[\underbrace{\left(\frac{a}{4} - \frac{a^3 Q}{4a^2Q + 4EI\pi^2} \right)}_{A} + \underbrace{\left(\frac{a^2 Q}{2a^2Q + 2EI_z\pi^2} \right)}_{B} - \frac{1}{2} \right) x \Bigg] - \underbrace{\frac{a^3 PBoQ}{(a^2Q + EI_z\pi^2)^2}}_{C} \sin \frac{\pi x}{a} \qquad (4\text{-}7)$$

For simplicity the coefficients in equation (4-7) shall be labeled

,B, and C as indicated, and (4-7) then becomes:

$$\frac{d^2v}{dx^2} = \frac{PBo}{EI_z} \cos \frac{\pi x}{a} (A + Bx) - C \sin \frac{\pi x}{a}$$

nd

$$\left(\frac{d^2v}{dx^2}\right)^2 = \left(\frac{PBo}{EI_z}\right)^2 \cos^2 \frac{\pi x}{a} \left(A^2 + 2ABx + B^2x^2 \right)$$

$$- 2 \frac{PBo}{EI_z} (AC + BCx) \sin \frac{\pi x}{a} \cos^2 \frac{\pi x}{a} + C^2 \sin^2 \frac{\pi x}{a} \qquad (4\text{-}8)$$

ow with equation (4-8) there is sufficient information to solve the train energy equation.

$$U = \int_o^{a/2} \left[EI_z \left(\frac{d^2v}{dx^2}\right)^2 + GJ\left(\frac{dB}{dx}\right)^2 + ECw \left(\frac{d^2B}{dx^2}\right)^2 \right] dx$$

$$= \int_o^{a/2} \left[\frac{P^2Bo^2}{EI_z} \cos^2 \frac{\pi x}{a} \left(A^2 + 2ABx + B^2x^2 \right) \right.$$

$$- 2PBo \left(AC + BCx \right) \sin \frac{\pi x}{a} \cos \frac{\pi x}{a}$$

$$+ EI_z C^2 \sin^2 \frac{\pi x}{a} + GJ \left(\frac{Bo\pi}{a}\right)^2 \sin \frac{\pi x}{a}$$

$$\left. + ECwBo^2 \left(\frac{\pi}{a} \right)^4 \cos^2 \frac{\pi x}{a} \right] dx \qquad (4\text{-}9)$$

arrying out the integration of equation (4-9) and reinserting the roper quantities for A,B, and C gives as a final expression for train energy:

$$U = \frac{P^2 Bo^2 a^3}{EI_z} \left[\left(\frac{6 + \pi^2}{192\pi^2}\right) - \left(\frac{6 + \pi^2}{24\pi^2}\right)\left(\frac{a^2Q}{4a^2Q + 4EI_z\pi^2}\right) + \left(\frac{6 + \pi^2}{12\pi^2}\right)\left(\frac{a^2Q}{4a^2Q + 4EI_z\pi^2}\right)^2 \right] -$$

$$P^2 Bo^2 a^5 \left[\left(\frac{2Q}{(4a^2Q + 4EI_z\pi^2)^2}\right) - \left(\frac{8a^2Q}{(4a^2Q + 4EI_z\pi^2)^3}\right) \right] +$$

$$P^2 Bo^2 a^7 \left[\frac{64EI_z\pi^2Q^2}{(4a^2Q + 4EI_z\pi^2)^4} \right] + GJ\left(\frac{Bo\pi}{a}\right)^2 \frac{a}{4}$$

$$+ ECwBo^2 \left(\frac{\pi}{a}\right)^4 \left(\frac{a}{4}\right) \qquad (4\text{-}10)$$

4.3 Development of the Work Equation

The work done will again be found from the principle that it is force times distance. The work performed by the load P is given by the same expression used in chapter 2:

$$W = P \int_0^{a/2} B\frac{d^2v}{dx^2} \left(\frac{a}{2} - x\right)dx + \frac{Ph}{4} Bo^2 \qquad (2\text{-}3)$$

Now, however, there will be a new expression for $\frac{d^2v}{dx^2}$, that of equation (4-6). Also, there must now also be added the work of the load Q at the end x = a/2 as it moves through a distance -u (figure 4-4).

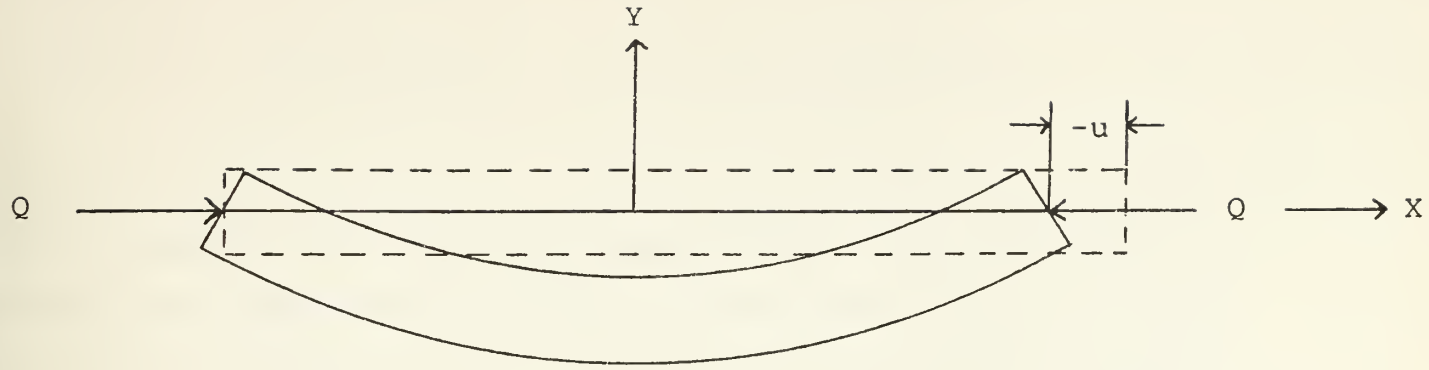

Figure (4-4) Motion of force Q through distance -u

The total work done by both loads will be:

$$W = P\int_{o}^{a/2} B\frac{d^2v}{dx^2}(\frac{a}{2} - x)dx + \frac{Ph}{4}Bo^2 + Qu_{x=a/2} \qquad (4\text{-}11)$$

All the necessary quantitites in equation (4-11) are known with the exception of $u_{x=a/2}$. To find this unknown the definition of membrane strain (reference 5) will be used:

$$\varepsilon = \frac{-du}{dx} + \frac{1}{2}\left(\frac{dv}{dx}\right)^2 + \frac{1}{2}\left(\frac{dw}{dx}\right)^2$$

Utilyzing inextensibility assumptions this membrane strain is set to zero:

$$\varepsilon = 0 = \frac{-du}{dx} + \frac{1}{2}\left(\frac{dv}{dx}\right)^2 + \frac{1}{2}\left(\frac{dw}{dx}\right)^2$$

or

$$\frac{du}{dx} = \frac{1}{2}\left(\frac{dv}{dx}\right)^2 + \frac{1}{2}\left(\frac{dw}{dx}\right)^2 \qquad (4\text{-}12)$$

As we are dealing with failure of the stiffener by a torsional (twisting) mode augmented by an axial compressive force, it is expected that deflection in the Z direction will be minor compared with that in the Y direction. Therefore, for purposes of a design relationship it will be considered sufficiently accurate to ignore the $\frac{dw}{dx}$ term in equation (4-12), and the relation becomes:

$$\frac{du}{dx} = \frac{1}{2} \left(\frac{dv}{dx} \right)^2 \qquad (4\text{-}13)$$

An expression for u may now be found by solving equation (4-13). Both sides are multiplied by dx and then integrated:

$$du = \frac{1}{2} \left(\frac{dv}{dx} \right)^2 dx$$

To find the total work done by Q, it is necessary to find the deflection of the extreme right hand side of the beam, at x=a/2. So the limits of integration must be over the entire length of the beam, x=-a/2 to x=a/2; or, twice over half the beam, x=0 to x=a/2:

$$u_{x=a/2} = 2 \int_{0}^{a/2} \frac{1}{2} \left(\frac{dv}{dx} \right)^2 dx \qquad (4\text{-}14)$$

For v equation (4-5) is used, and the first derivative of v with respect to x is:

$$\frac{dv}{dx} = \underbrace{\left(\frac{\pi a^2 PBo}{4a^2Q + 4EI_z\pi^2}\right)}_{D} \sin\frac{\pi x}{a} - \underbrace{\left(\frac{a^2 EI_z \pi^2 PBo}{(a^2Q + EI_z\pi^2)^2}\right)}_{E} \cos\frac{\pi x}{a}$$

$$+ \underbrace{\left(\frac{a^2 PBo}{2a^2Q + 2\,EI_z\pi^2}\right)}_{F} \cos\frac{\pi x}{a} - \underbrace{\left(\frac{a\pi PBo}{2a^2Q + 2\,EI_z\pi^2}\right)}_{G} x \sin\frac{\pi x}{a} \qquad (4\text{-}15)$$

Again for simplicity the coefficients in equation (4-15) are labeled D,E,F, and G as shown; and equation (4-14) becomes:

$$u_{x=a/2} = \int_0^{a/2} \left[\sin^2\frac{\pi x}{a} (D^2 - 2DGx + G^2x^2) \right.$$

$$+ 2D(F-E) \sin\frac{\pi x}{a}\cos\frac{\pi x}{a} + 2G(E-F)\, x \sin\frac{\pi x}{a}\cos\frac{\pi x}{a}$$

$$\left. + \cos^2\frac{\pi x}{a} (F^2 - 2EF + E^2) \right] dx \qquad (4\text{-}16)$$

Carrying out the integration of equation (4-16) and replacing coefficients gives for the displacement $u_{x=a/2}$:

$$u_{x=a/2} = \frac{a^5 P^2 Bo^2}{(4a^2Q + 4EI_z\pi^2)} \left[\left(\frac{18 + \pi^2}{12}\right) - \left(\frac{24EI_z\pi^2}{4a^2Q + 4EI_z\pi^2}\right) \right.$$

$$\left. + \left(\frac{8EI_z\pi^2}{4a^2Q + 4EI_z\pi^2}\right)^2 \right] \qquad (4\text{-}17)$$

All quantities are now known to determine the work done by the combined lateral and axial loads. Utilyzing the proper expressions for B, $\frac{d^2v}{dx^2}$ (eq. 4-6), and $u_{x=a/2}$ (eq. 4-17), equation (4-11) becomes:

$$W = P \int_0^{a/2} Bo \cos\frac{\pi x}{a} \left\{ \frac{P}{2EI_z} \left(\frac{a}{2} - x \right) Bo \cos\frac{\pi x}{a} + \frac{Q}{EI_z} \left[\left(\frac{-a^3 PBo}{4a^2Q + 4EI_z\pi^2} \right) \cos\frac{\pi x}{a} - \left(\frac{a^3 EI_z \pi PBo}{(a^2Q + EI_z\pi^2)^2} \right) \sin\frac{\pi x}{a} + \left(\frac{a^2 PBo}{2a^2Q + 2EI_z\pi^2} \right) x \cos\frac{\pi x}{a} \right] \right\} \left(\frac{a}{2} - x \right) dx + \frac{Ph}{4} Bo^2 + \frac{a^5 P^2 Bo^2}{(4a^2Q + 4EI_z\pi^2)} \left[\left(\frac{18 + \pi^2}{12} \right) - \left(\frac{24EI_z\pi^2}{4a^2Q + 4EI_z\pi^2} \right) + \left(\frac{8EI_z\pi^2}{4a^2Q + 4EI_z\pi^2} \right)^2 \right] \qquad (4\text{-}18)$$

Integrating equation (4-18) yields for work:

$$W = \frac{P^2 Bo^2 a^3}{EI_z} \left[\left(\frac{6 + \pi^2}{96\pi^2} \right) - \left(\frac{6 + \pi^2}{24\pi^2} \right) \left(\frac{a^2Q}{4a^2Q + 4EI_z\pi^2} \right) \right] + \left(\frac{P^2 Bo^2 a^5 Q}{(4a^2Q + 4EI_z\pi^2)^2} \right) \left[\left(\frac{\pi^2 - 6}{12} \right) - \left(\frac{24EI_z\pi^2}{4a^2Q + 4EI_z\pi^2} \right) + \left(\frac{8EI_z\pi^2}{4a^2Q + 4EI_z\pi^2} \right)^2 \right] + \frac{Ph}{4} Bo^2 \qquad (4\text{-}19)$$

4.4 Determination of the Critical Buckling Load Equation

To determine the relationship between the loads P and Q and how they will affect buckling of a stiffener, the conservation of energy principle will once more be employed. First calculus of variations with respect to Bo is applied to equations (4-19) and (4-10) to determine as before δW and δU:

$$\delta W = 2Bo\delta Bo \left\{ \frac{P^2a^3}{EI_z} \left[\left(\frac{6+\pi^2}{96\pi^2} \right) - \left(\frac{6+\pi^2}{24\pi^2} \right) \left(\frac{a^2Q}{4a^2Q + 4EI_z\pi^2} \right) \right] + \left(\frac{P^2a^5Q}{(4a^2Q + 4EI_z\pi^2)^2} \right) \left[\left(\frac{\pi^2 - 6}{12} \right) - \left(\frac{24EI_z\pi^2}{4a^2Q + 4EI_z\pi^2} \right) + \left(\frac{8EI_z\pi^2}{4a^2Q + 4EI_z\pi^2} \right)^2 \right] + \frac{Ph}{4} \right\} \qquad (4\text{-}20)$$

and

$$\delta U = 2Bo\delta Bo \left\{ \frac{P^2a^3}{EI_z} \left[\left(\frac{6+\pi^2}{192\pi^2} \right) - \left(\frac{6+\pi^2}{24\pi^2} \right) \left(\frac{a^2Q}{4a^2Q + 4EI_z\pi^2} \right) + \left(\frac{6+\pi^2}{12\pi^2} \right) \left(\frac{a^2Q}{4a^2Q + 4EI_z\pi^2} \right) \right] - P^2a^5 \left[\left(\frac{2Q}{(4a^2Q + 4EI_z\pi^2)^2} \right) - \left(\frac{8a^2Q}{(4a^2Q + 4EI_z\pi^2)^3} \right) \right] + P^2a^7 \left(\frac{64EI_z\pi^2Q^2}{(4a^2Q + 4EI_z\pi^2)^4} \right) + \frac{\pi^2}{4a} \left(GJ + ECw\left(\frac{\pi}{a}\right)^2 \right) \right\} \qquad (4\text{-}21)$$

By conservation of energy $\delta W = \delta U$; thus equations (4-20) and (4-21) may be equated, and the ultimate relation between P and Q appears as the following quadratic with respect to P:

$$\frac{P^2a^3}{EI_z}\left(\frac{6+\pi^2}{192\pi^2}\right) + \frac{P^2a^5Q}{(4a^2Q+4EI_z\pi^2)^2}\left[\left(\frac{18+\pi^2}{12}\right) - \left(\frac{24EI_z\pi^2+8a^2Q}{4a^2Q+4EI_z\pi^2}\right) + \left(\frac{64(EI_z\pi^2)^2-64a^2QEI_z\pi^2}{(4a^2Q+4EI_z\pi^2)^2}\right)\right]$$

$$+ \frac{Ph}{4} - \frac{\pi^2}{4a}\left(GJ + ECw\left(\frac{\pi}{a}\right)^2\right) = 0 \qquad (4\text{-}22)$$

Equation (4-22) presents the relationship between P and Q when they are applied to an I beam. If both forces are applied in like manner to model II, the flat bar stiffener, the only difference in equation (4-22) is that the final term, $ECw\left(\frac{\pi^4}{4a^3}\right)$, will be absent since Cw for the flat bar is zero.

CHAPTER 5

EVALUATION OF RESULTS OF THE BUCKLING LOAD EQUATION

5.1 Nondimensionalization of the Buckling Load Equation

It is now our desire to use equation (4-22) to study the interaction between the lateral and axial loads P and Q and determine how changes in the physical dimensions of a stiffener effect its ability to withstand against failure. The most interesting comparison to be made from equation (4-22) would be a plot of lateral load P versus axial load Q, i.e. a means to predict for a given amount of lateral load how much simultaneous axial load a stiffener will take before buckling and vice versa.

In order to construct such a plot it will be convenient to first nondimensionalize equation (4-22). An ideal means to nondimensionalize P and Q is to express them as a fraction of the Euler buckling load (equation 2-5 of reference 1):

$$Q_e = \frac{\pi^2 E I_z}{a^2}$$

The Euler critical buckling load Qe is that load applied as in the manner shown in figure 5-1 that will just cause in-plane deflection of the beam without the twisting effects of torsion.

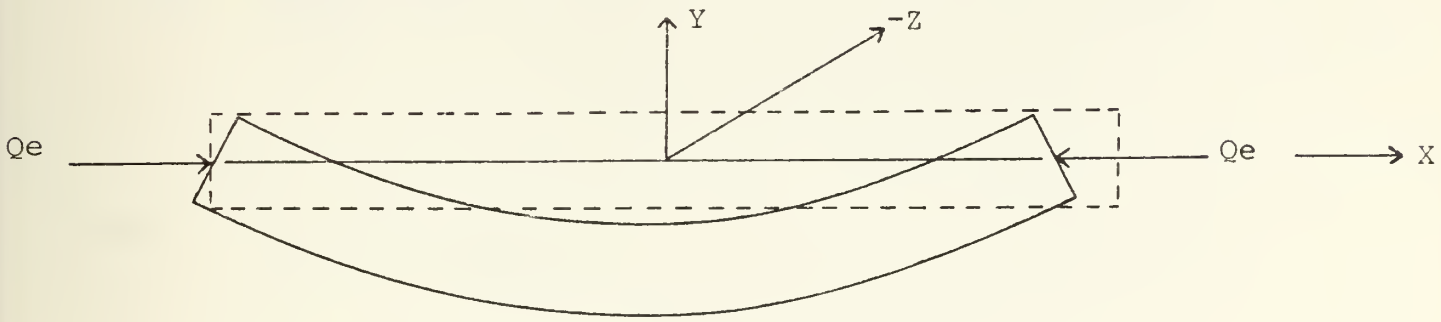

Figure (5-1) Euler Buckling of a Beam

Use of the Euler buckling load as a nondimensionalizing parameter is particularly well suited to equation (4-22) noticing the frequent occurrence in it of the expression

$$4a^2Q + 4EI_z\pi^2$$

which may be written, if Q is taken as positive in tension as:

$$-4a^2Q + 4a^2Qe = 4a^2Qe\left(1 - \frac{Q}{Qe}\right)$$

The final dimensionless form of (4-22) will be:

$$\left(\frac{P}{Qe}\right)^2 \left[\left(\frac{6\pi^2 + \pi^4}{192}\right) - \left(\frac{18\pi^2 + \pi^4}{192}\right) \frac{Q}{Qe} \left(\frac{1}{L}\right)^2 - \left(\frac{3\pi^2}{8}\right) \frac{Q}{Qe} \left(\frac{1}{L}\right)^3 + \frac{\pi^2}{8} \left(\frac{Q}{Qe}\right)^2 \left(\frac{1}{L}\right)^3 + \frac{\pi^2}{4} \frac{Q}{Qe} \left(\frac{1}{L}\right)^4\right.$$

continued next page

$$+ \frac{\pi^2}{4} \left(\frac{Q}{Qe}\right)^2 \left(\frac{l}{L}\right)^4 \Bigg] + \left(\frac{P}{Qe}\right) \frac{\pi^2}{4} \frac{h}{a} - \left(\frac{\pi^2}{8(1+\nu)}\right) \frac{J}{I_z}$$

$$- \frac{\pi^4}{4} \left(\frac{Cw}{a^2 I_z}\right) = 0 \qquad (5\text{-}1)$$

where

$$L = 1 - \frac{Q}{Qe}$$

To three decimal accuracy equation (5-1) becomes:

$$\left(\frac{P}{Qe}\right)^2 \left\{ .816 - \frac{Q}{Qe} \left[1.433 \left(\frac{l}{L}\right)^2 + 3.701 \left(\frac{l}{L}\right)^3 - 2.467 \left(\frac{l}{L}\right)^4 \right] \right.$$

$$+ \left(\frac{Q}{Qe}\right)^2 \left[1.234 \left(\frac{l}{L}\right)^3 + 2.467 \left(\frac{l}{L}\right)^4 \right] + 2.467 \left(\frac{P}{Qe}\right) \frac{h}{a}$$

$$- .949 \frac{J}{I_z} - 24.352 \left(\frac{Cw}{a^2 I_z}\right) = 0 \qquad (5\text{-}2)$$

Equation (5-2) will be applicable to an I beam, and to make it useful for a flat bar stiffener as usual set Cw to zero and delete the final term.

5.2 Model I - Effects of Varying Stiffener Dimensions on the Value of the Critical Buckling Load

The results of equation (5-2) for I beams of various sizes are

shown graphically in figures (5-2) to (5-5). The points on the graphs were derived from computer analysis shown in Appendix A. Along the abscissa of each of the graphs is shown the dimensionless ratio of axial load Q to the Euler buckling load Qe, while the ordinate gives the ratio of the critical torsional buckling load Pcr to the Euler load. Thus by calculating the Euler buckling load of a stiffener and being given a value of axial load Q, we can enter the graphs with a value of Q/Qe and obtain a prediction of how much lateral force Pcr, applied at the center of the span, that the stiffener will withstand before torsional buckling occurs. For example, in figure (5-2) if an axial force equal to a value of .4Qe is applied to stiffener 3 with h/a ratio equal to .14, then a lateral force of just .16 Qe should produce failure of the stiffener by torsional buckling.

Though no previous design formulas relating simultaneous axial and lateral loading of a stiffener to cause torsional buckling were found, the results of equation (5-2) do appear reasonable. It is possible to verify the predicted results of Pcr/Qe at the intersection with the ordinate (Q/Qe=0). For example, again for stiffener 3 of figure (5-2) with h/a equal to .14, the complete set of scantlings for this I beam are:

a=3.07m

h=.43m

b=.09m

tf=.02m

tw=.007m

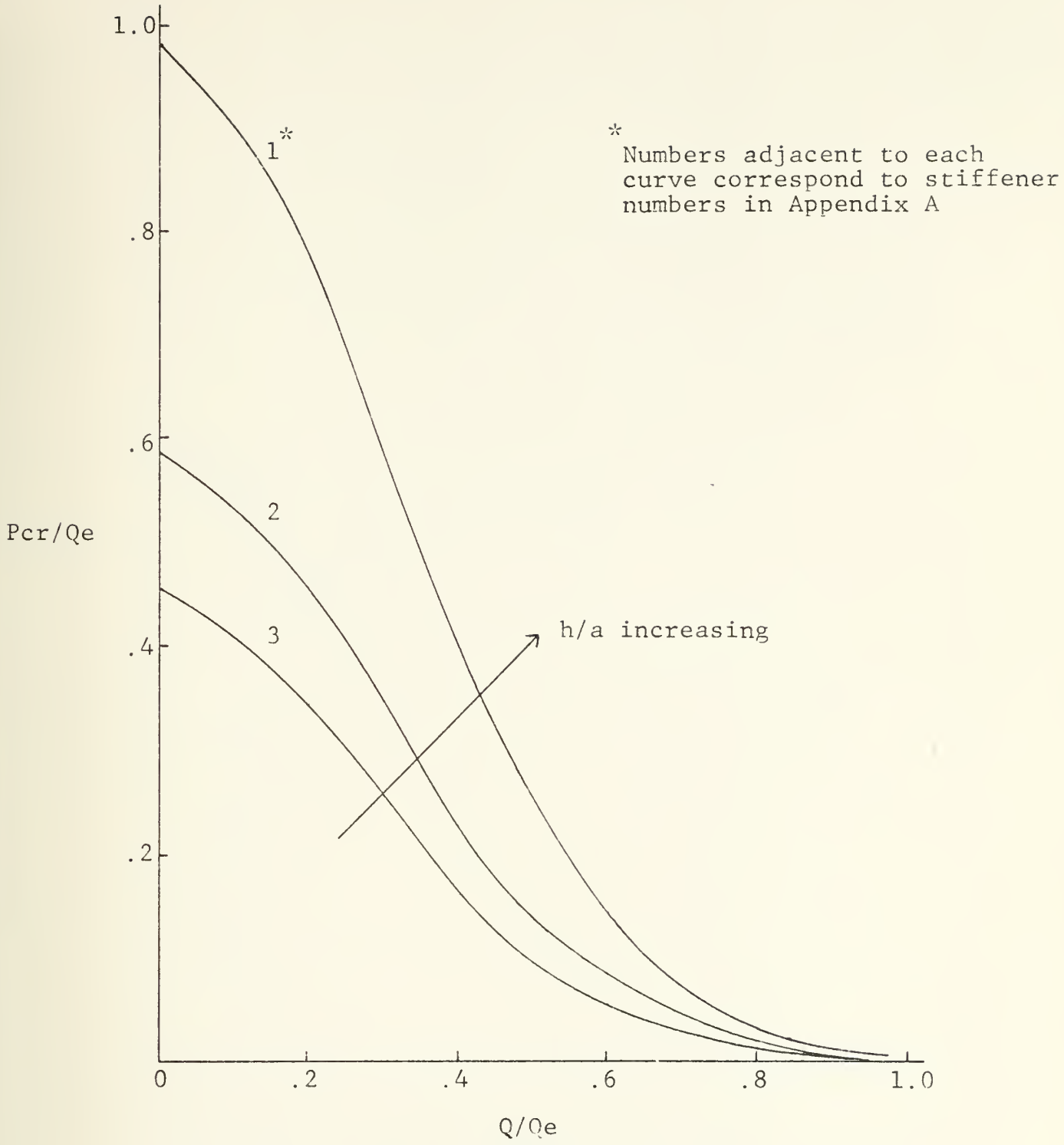

Figure (5-2) Pcr/Qe vs Q/Qe for I beam varying h/a

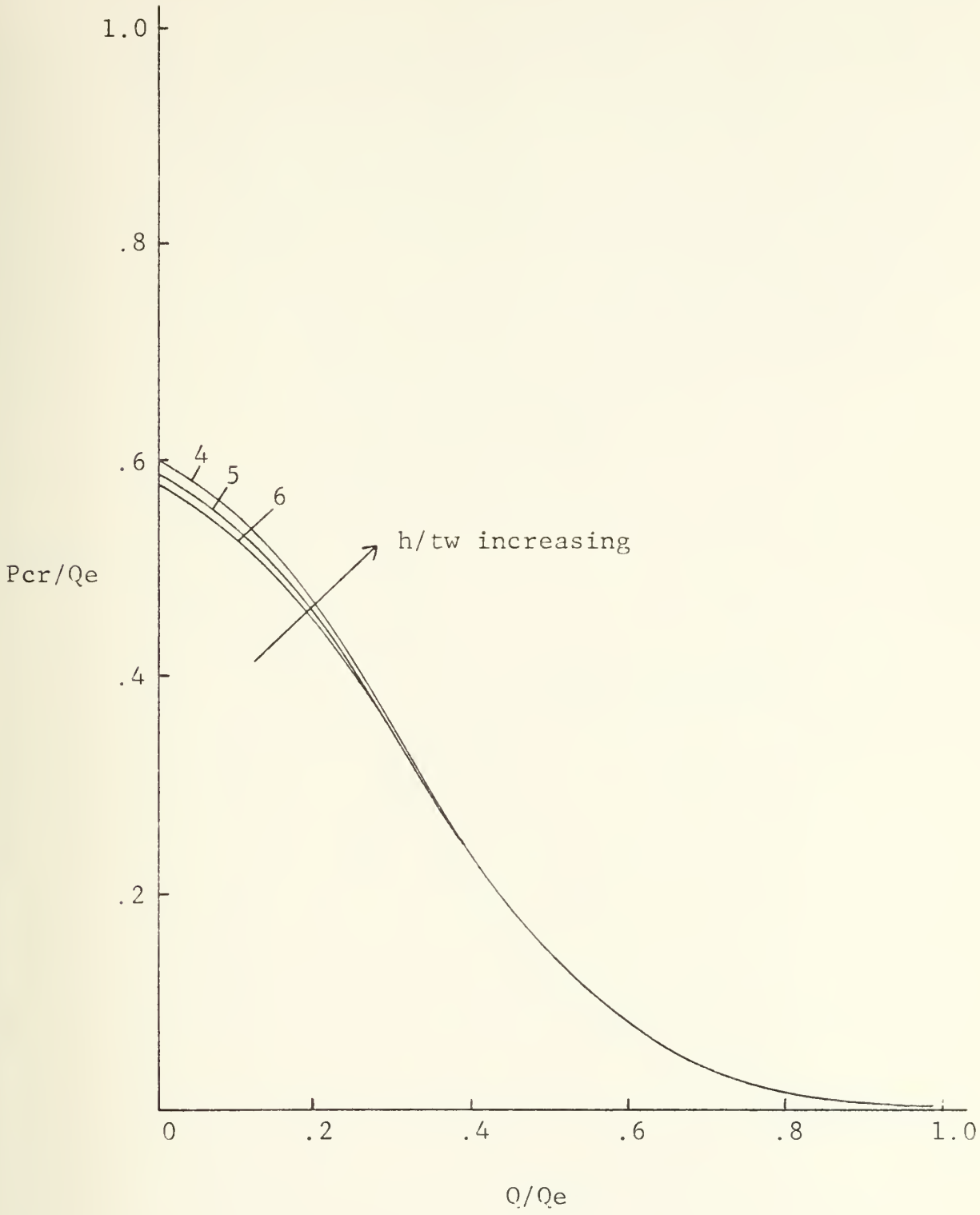

Figure (5-3) Pcr/Qe vs Q/Qe for I beam varying h/tw

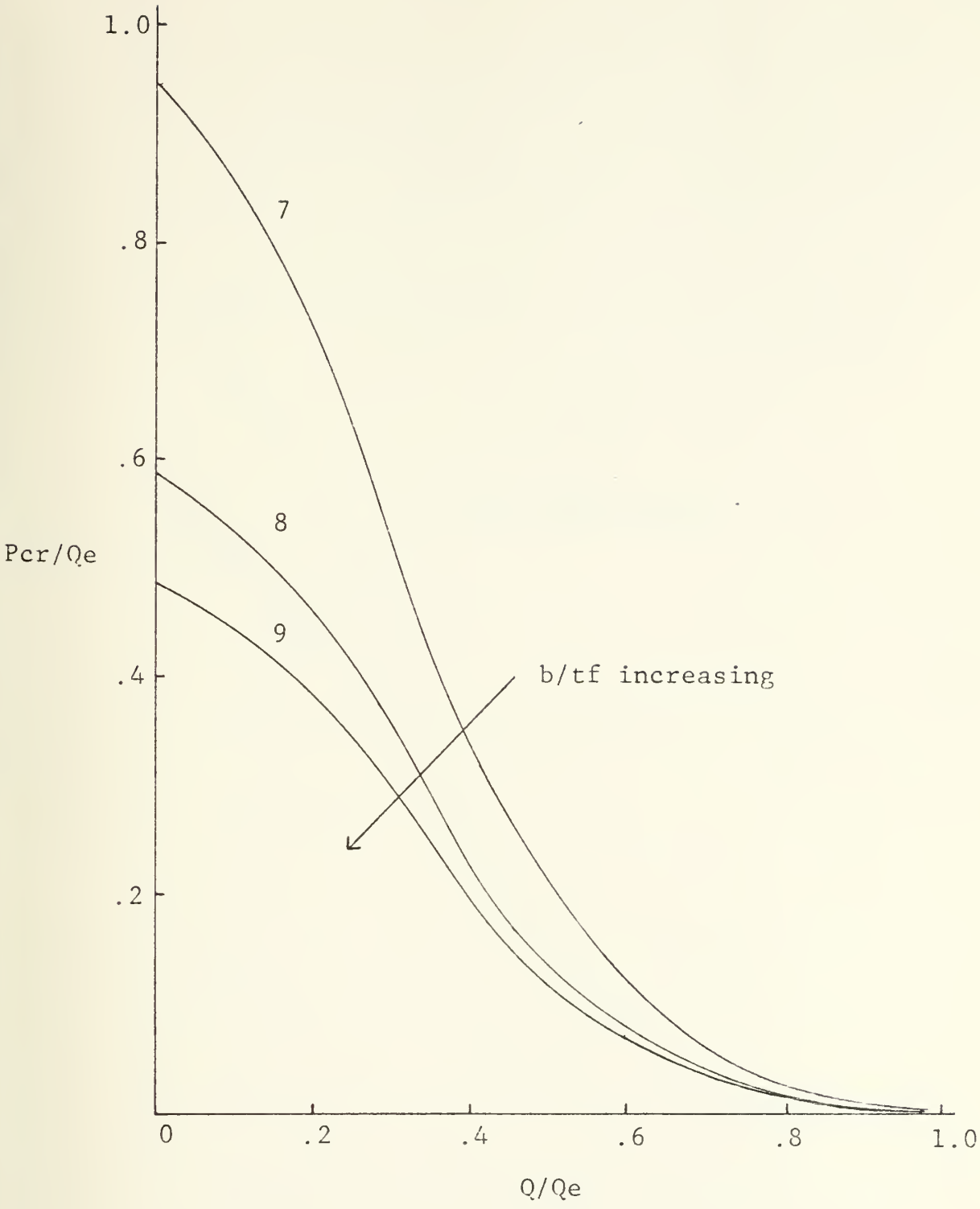

Figure (5-4) Pcr/Qe vs Q/Qe for I beam varying b/tf

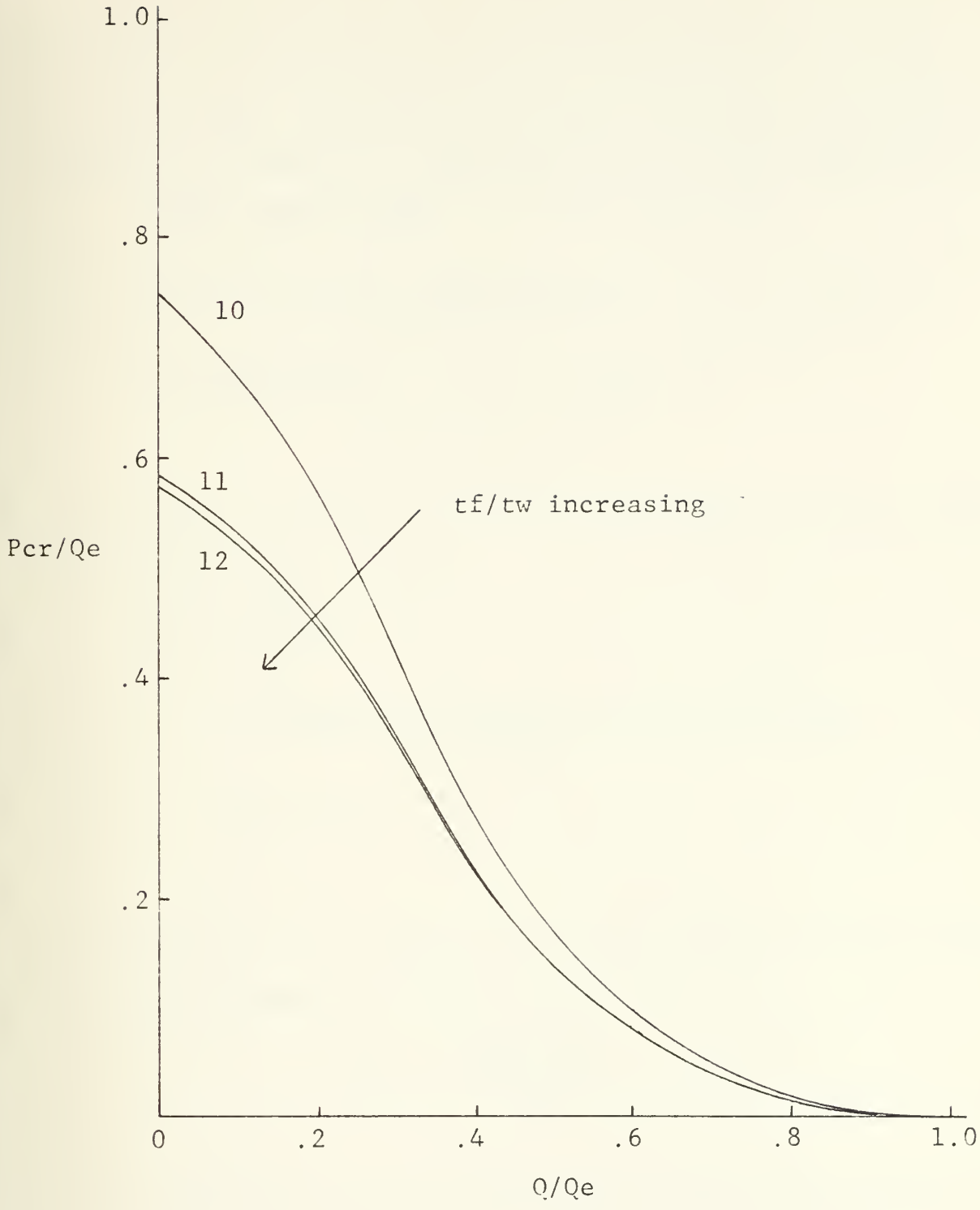

Figure (5-5) Pcr/Qe vs Q/Qe for I beam varying tf/tw

Utilyzing these dimensions the warping constant, St. Venant's torsion constant, and moment of inertia of the stiffener about the web are:

$$Cw = \frac{(.02m)(.43m)^2(.09m)^3}{24} = 1.123 \times 10^{-7}\ m^6$$

$$J = \frac{2(.09m)(.02m)^3 + (.43m)(.007m)^3}{3} = 5.292 \times 10^{-7}\ m^4$$

$$I_z = \frac{2(.09m)^3(.02m)}{12} = 2.430 \times 10^{-6} m^4$$

Now the Euler buckling load Qe for this beam calculated from equation (2-5) of reference (1) is:

$$Qe = \frac{\pi^2 EI_z}{a^2}$$

$$= \frac{\pi^2(2.068 \times 10^8\ KN/m^2)\ (2.430 \times 10^{-6} m^4)}{(3.07m)^2}$$

$$= 526.2\ KN$$

To find the critical load for torsional buckling from a lateral load alone we use equation (6-18) of reference (1):

$$Pcr = \frac{\gamma\sqrt{EI_z GJ}}{a^2}$$

γ is obtained by entering figure (2-4) of this thesis with

$$a^2\ \frac{GJ}{ECw} = \frac{(3.07m)^2(7.954 \times 10^7\ KN/m^2)(5.292 \times 10^{-7} m^4)}{(2.068 \times 10^8\ KN/m^2)(1.123 \times 10^{-7} m^6)}$$

$$= 17.08$$

and reading off γ of 15.3. Now the critical torsional buckling load is:

$$P_{cr} = \frac{15.3\left[(2.068\times10^{8}\,KN/m^{2})(2.430\times10^{-6}\,m^{4})(7.954\times10^{7}\,KN/m^{2})(5.292\times10^{-7}\,m^{4})\right]^{1/2}}{(3.07m)^{2}}$$

$$= 236.1\ KN$$

A calculated ratio of Pcr/Qe then is:

$$\frac{Pcr}{Qe} = \frac{236.1\ KN}{526.2\ KN}$$

$$= .449$$

The value of Pcr/Qe obtained from equation (5-2) for this same stiffener and shown on figure (5-2) for Q/Qe=0 is .455; an agreement of 1.3%. Table 5-1 lists the values for Pcr/Qe at Q/Qe=0 for all the curves of figures (5-2) through (5-5) and shows the good correlation between the results of equation (5-2) and the values calculated using equations (2-5) and (6-18) of reference (1). All cases are within 2% agreement except stiffener 1, figure (5-2), and stiffener 9, figure (5-4). In these two cases a problem arises in trying to pick off an accurate value of γ from figure (2-4) for use in equation (6-18). We are in the vicinity of $\frac{a^2GJ}{ECw}$ equal to one on figure (2-4). Here the values of γ are changing quite rapidly, and a small error in γ can lead to an error of several percentage points in Pcr/Qe.

Curve	Pcr/Qe at Q/Qe=0 equation (5-2)	Pcr/Qe AT Q/Qe=0 reference (1)	Percent Agreement
Fig 5-2,Beam 1	.986	1.056	6.6%
Beam 2	.586	.583	.5%
Beam 3	.455	.449	1.3%
Fig 5-3,Beam 4	.596	.598	.3%
Beam 5	.586	.583	.5%
Beam 6	.573	.575	.5%
Fig 5-4,Beam 7	.945	.938	.7%
Beam 8	.586	.583	.5%
Beam 9	.486	.515	5.6%
Fig 5-5,Beam 10	.748	.734	1.9%
Beam 11	.586	.583	.5%
Beam 12	.575	.587	2.0%

Table (5-1) Comparison of values for Pcr/Qe at Q/Qe=0 for an I beam as calculated by equation (5-2) versus values calculated by equations (2-5) and (6-18) of reference (1).

At the right hand side of the curves of figures (5-2) through (5-5) the graphs asymptotically approach the x axis, but have no value at Q/Qe = 1. This is because at Q/Qe=1 the expression 1/L in equation (5-2) will have the indeterminate form 1/0. This is to be expected

though, because at Q/Qe=1 the stiffener has failed due to Euler buckling, and equation (5-2) can no longer be used to describe the relation between Pcr and Q.

The general trend of all the curves is similar, a rapidly decreasing initial slope with the values for Pcr/Qe falling off approximately 50% by Q/Qe =.37, then tapering off of the slope as the curves approach Q/Qe=1. The dimensionless parameters that were varied in constructing the graphs were h/a, h/tw, b/tf, and tf/tw. In each figure the varied parameter has been doubled twice to construct the three curves. It is seen that the ratios which exhibit the greatest influence on Pcr/Qe are h/a and b/tf. Varying h/tw has practically no effect upon Pcr/Qe, while changing tf/tw at first appears to have a fairly significant effect but seems to steady out after tf/tw gets above about 2.8.

5.3 Model II - Effects of Varying Stiffener Dimensions on the Value of the Critical Buckling Load

Figure (5-6) shows the results of equation (5-2) for model II, the flat bar stiffener. Once again the values of Pcr/Qe for Q/Qe=0 may be checked against those obtained using the formulas of Timoshenko. Consider for example stiffener 13 with h/a=.0523. The stiffener will have dimensions and factors as follows:

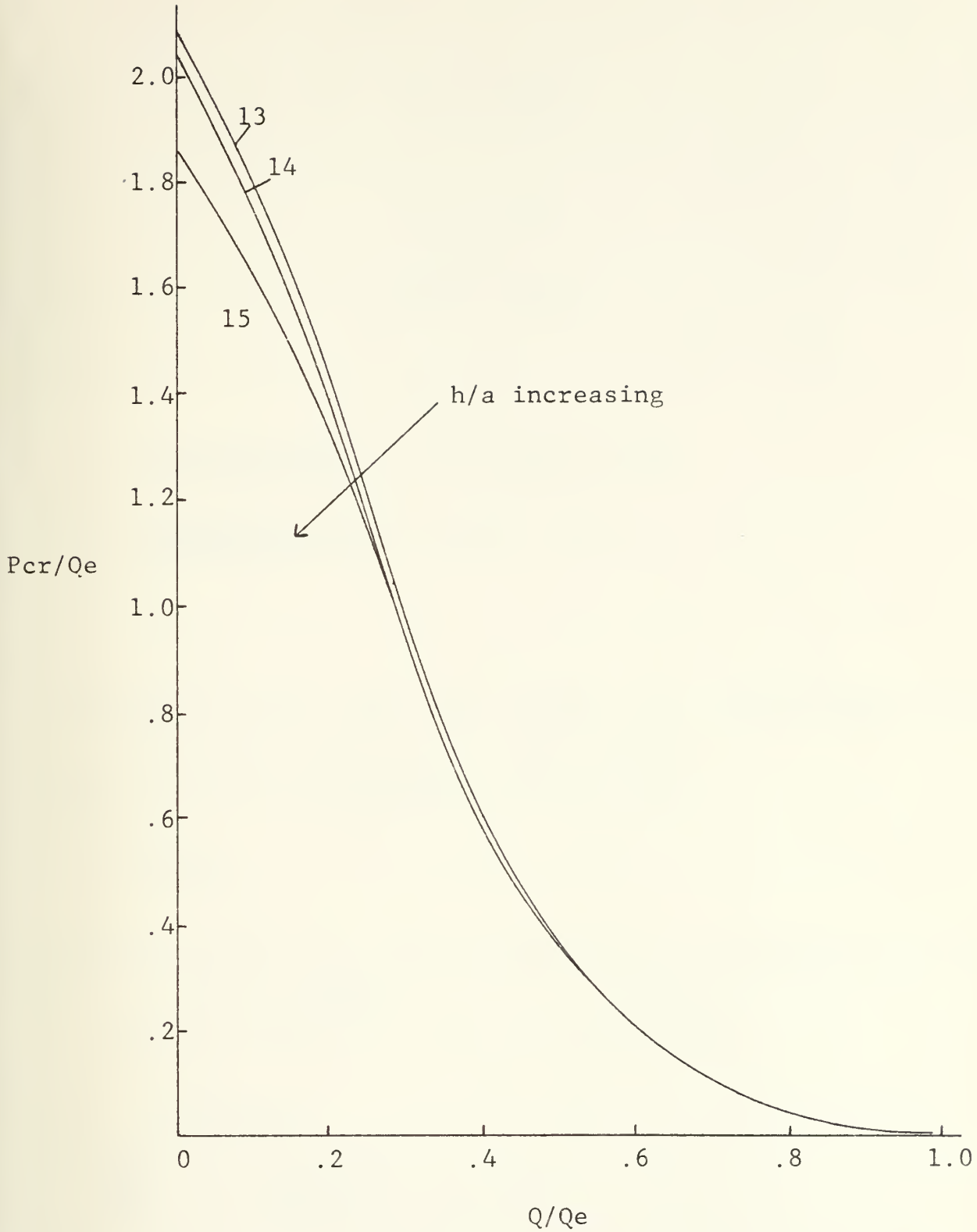

Figure (5-6) Pcr/Qe vs Q/Qe for Flat Bar varying h/a

$$a = 3.059m$$

$$h = .16m$$

$$tw = .0064m$$

$$Cw = 0$$

$$J = \frac{(.16m)(.0064m)^3}{3} = 1.398 \times 10^{-8} m^4$$

$$I_z = \frac{(.16m)(.0064m)^3}{12} = 3.495 \times 10^{-9}\ m^4$$

The Euler buckling load from equation (2-5) of reference (1) is:

$$Qe = \frac{\pi^2\ (2.068 \times 10^8 KN/m^2)(3.495 \times 10^{-9} m^4)}{(3.059m)^2}$$

$$= .762KN$$

Pcr for the flat bar from equation (6-37) of reference (1) is:

$$Pcr = \frac{16.94\sqrt{EI_z GJ}}{a^2}\left(1 - .87\,\frac{h}{a}\sqrt{\frac{EI_z}{GJ}}\right)$$

$$=1.564\ KN$$

$$\frac{Pcr}{Qe} = \frac{1.564\ KN}{.762\ KN} = 2.052$$

The value of Pcr/Qe obtained from equation (5-2) is 2.079, an agreement of 1.3%. The agreement of the values for the other two curves are shown in table (5-2). It is seen that there is good

agreement in all three cases.

Curve	Pcr/Qe AT Q/Qe=0 equation (5-2)	Pcr/Qe AT Q/Qe=0 reference (1)	Percent Agreement
FIG 5-6,Beam 13	2.079	2.051	1.3%
FIG 5-6,Beam 14	2.005	1.978	1.4%
FIG 5-6,Beam 15	1.864	1.817	2.6%

TABLE (5-2) Comparison of values of Pcr/Qe at Q/Qe=0 for a flat bar as calculated by equation (5-2) versus values calculated by equation (6-37) of reference (1).

As before with the I beam, equation (5-2) is undefined for the flat bar at Q/Qe=1 owing to the quantity 1/L being equal to 1/0; but this is acceptable since the bar has undergone Euler buckling at Q/Qe=1. The shape and trends of the curves are identical to the I beam, and again the curve falls 50% by about Q/Qe=.36. It is interesting to note that whereas for the I beam Pcr/Qe is always less than one, Pcr/Qe for the flat plate starts out greater than one by a

factor of approximately two and remains greater than one until Q/Qe=.29. This would indicate the much lower relative Qe for the flat bar and its much greater susceptibility to failure by Euler buckling than the I beam.

Owing to the geometric simplicity of the flat bar, the only dimensionless parameter that may be varied independently is h/a. If h/tw is varied while keeping h/a constant, there will be no change in equation (5-2). As Cw is zero and the ratio J/I_z for a flat bar is always 4, the only term that will alter equation (5-2) is h/a. Moreover, as can be seen from figure (5-6), even the changing of h/a has very little effect upon Pcr/Qe.

CHAPTER 6

CONCLUSIONS

In this thesis has been studied the problem of torsional buckling of I beam and flat bar type stiffeners under combined lateral and axial loads. First examined was the case of lateral loading alone. An energy method was employed to determine critical buckling stress Pcr of a stiffener, and equations (2-4) and (3-1) were developed to cover lateral loading of I beams and flat bar stiffeners respectively. Good agreement was shown between equations (2-4) and (3-1) and the published formulas of Timoshenko. One distinct advantage of equation (2-4) for an I beam is that it gives an exact formula for the coefficient γ in reference (1) equation (6-18) rather than a tabular listing of γ for different sizes of stiffeners. As was noted in chapter 5, when trying to verify some of the values of Pcr/Qe it becomes quite difficult to pick off an accurate value of γ when near the bottom of the curve in figure (2-4). In particular, for the two cases in Table (5-1) where the percent agreement between Pcr/Qe as calculated from this thesis' equations and those of reference (1) were 6.6% and 5.6%, the differences fall to just .5% and .2% when γ is calculated from equation (2-4) rather than read from the graph.

Next was approached the problem of combined lateral and axial loading of a stiffener. Again an energy approach to the problem was used, and the ultimate result was equation (4-22) which when nondimensionalized using Euler buckling load took the form of equation (5-1). Though no other previous formula relating torsional buckling under combined loads was found for comparison, the end points of the curves of figures (5-2) through (5-6) could be checked and were found to be in good agreement with results obtained using other published formulas. The trends of all the curves appear reasonable: a constant decrease, more rapid at first, of the amount of lateral load a stiffener can sustain as an increasing axial load is applied. As another vote of confidence, if Q is set to zero in equation (4-22) the expression reverts to that of equation (2-4) which was verified against equation (6-18) of reference (1). An area for research would be to experimentally verify the results of equation (4-22), though it would certainly be expensive due to the complexity of a test apparatus capable of imposing and measuring simultaneous lateral and axial loads.

Equation (4-22) is somewhat lengthy for hand calculations, particularly when the constants Cw, H, and Iz must also be found before using it. It is not too cumbersome if only one stiffener is involved, but if a number of stiffeners are being investigated it does lend itself well to a computerized study, especially if an investigation is to be done varying stiffener dimensions. The simple

BASIC program with accompanying results shown in Appendix A was written and utilyzed to generate the values for constructing figures 5-2 through 5-6.

APPENDIX A

Computer Adaptation of Equation (4-22)

```
0 INPUT N,A,B,H,TF,TW,X
1 REM N = STIFFENER NUMBER
2 REM A = STIFFENER LENGTH
3 REM B = STIFFENER FLANGE BREADTH
4 REM H = STIFFENER HEIGHT
5 REM TF = STIFFENER FLANGE THICKNESS
6 REM TW = STIFFENER WEB THICKNESS
7 REM X=0 FOR I BEAM, 1 FOR FLAT BAR
0 LET CW=(TF*(H^2)*(B^3))/24
0 LET J=((2*B*(TF^3))+(H*(TW^3)))/3
0 LET I=(((B^3)*TF)/6)+(((H*(TW^3))/12)*X)
0 FOR Q=0 TO .5 STEP .2
0 LET L=1-Q
0 LET A1=Q*((1.433*((1/L)^2))+(.375*((1/L)^3))-(.433*(1/L)^4))
0 LET A2=(Q^2)*((1.234*((1/L)^3))+(2.467*((1/L)^4)))
0 LET A3=.816-A1+A2
00 LET B1=2.467*(H/A)
10 LET C=(-.949*(J/I))-(24.352*CW/((A^2)*I))
20 LET P=(-B1+(((B1^2)-(4*A3*C))^.5))/(2*A3)
30 IF Q>0 GOTO 200
35 LPRINT "STIFFENER NUMBER";N
40 LPRINT "STIFFENER DIMENSIONS ARE:"
50 LPRINT
60 LPRINT "A=";A,"B=";B,"H=";H,"TF=";TF,"TW=";TW
70 LPRINT
80 LPRINT "H/A =";H/A,"I/TW =";(I/TW),"B/TF =";B/TF,"TF/TW =";TF/TW
90 LPRINT
00 LPRINT "Q/QC =";Q,"P/QC =";P
10 NEXT Q
20 END
```

TIFFENER NUMBER 1
TIFFENER DIMENSIONS ARE:

= .76 B= 9.000001E-02 H= .43 TF= .02 TW= .007

/A = .5657895 H/TW = 61.42857 B/TF = 4.500001
TF/TW = 2.857143

/QE = 0 P/QE = .9813218
/QE = .2 P/QE = .7785093
/QE = .4 P/QE = .397958
/QE = .6 P/QE = .1461382
/QE = .8 P/QE = 3.061843E-02

TIFFENER NUMBER 2
TIFFENER DIMENSIONS ARE:

= 1.53 B= 9.000001E-02 H= .43 TF= .02 TW= .007

/A = .2810458 H/TW = 61.42857 B/TF = 4.500001
TF/TW = 2.857143

/QE = 0 P/QE = .9866170
/QE = .2 P/QE = .4530151
/QE = .4 P/QE = .2237983
/QE = .6 P/QE = 8.302906E-02
/QE = .8 P/QE = 1.731309E-02

TIFFENER NUMBER 3
TIFFENER DIMENSIONS ARE:

= 3.07 B= 9.000001E-02 H= .43 TF= .02 TW= .007

/A = .1400652 H/TW = 61.42857 B/TF = 4.500001
TF/TW = 2.857143

/QE = 0 P/QE = .4549441
/QE = .2 P/QE = .3430542
/QE = .4 P/QE = .1633666
/QE = .6 P/QE = 5.787631E-02
/QE = .8 P/QE = 1.195245E-02

```
TIFFENER NUMBER 4
TIFFENER DIMENSIONS ARE:

= 3.06        B= 9.000001E-02              H= [illegible]          TF= .02          TW= [illegible]

/A = .2810458              H/TW = [illegible]2.8571              B/TF = [illegible]
   TF/TW = 2.857143

/QE = 0        P/QE = .5981831
/QE = .2       P/QE = .4662787
/QE = .4       P/QE = .2323851
/QE = .6       P/QE = [illegible]
/QE = .8       P/QE = 1.755528E-02



TIFFENER NUMBER 5
TIFFENER DIMENSIONS ARE:

= 1.53        B= 9.000001E-02              H= .43          TF= [illegible]          TW= [illegible]

/A = .2810458              H/TW = [illegible]1.42857              B/TF = [illegible]
   TF/TW = 2.857143

/QE = 0        P/QE = .5966[illegible]
/QE = .2       P/QE = .4580[illegible]
/QE = .4       P/QE = [illegible]
/QE = .6       P/QE = [illegible]
/QE = .8       P/QE = [illegible]



TIFFENER NUMBER 6
TIFFENER DIMENSIONS ARE:

= .765        B= 9.000001E-02              H= .215         TF= .02          TW= .007

/A = .2810458              H/TW = 30.71429              B/TF = 4.500001
   TF/TW = 2.857143

/QE = 0        P/QE = .5807957
/QE = .2       P/QE = .4532437
/QE = .4       P/QE = .2269863
/QE = .6       P/QE = 8.242195E-02
/QE = .8       P/QE = 1.719072E-02
```

```
TIFFENER NUMBER 7
TIFFENER DIMENSIONS ARE:

= 1.53        B= .045        H= .43        TF= .02        TW= .007

/A = .2810458                H/TW = 61.42857                H/TF = 2.25     P/ W = 3
57143

/QE = 0        P/QE = .9451715
/QE = .2       P/QE = .7109337
/QE = .4       P/QE = .3374293
/QE = .6       P/QE = .1197449
/QE = .8       P/QE = 2.4630515E-02
```

```
STIFFENER NUMBER 8
STIFFENER DIMENSIONS ARE:

A= 1.53        B= 9.000001E-02                H= .43        TF= .02        TW= .007

H/A = .2810458                H/TW = 61.42857                B/TF = 4.500001
    TF/TW = 2.857143

Q/QE = 0        P/QE = .3866178
Q/QE = .2       P/QE = .4580121
Q/QE = .4       P/QE = .2287983
Q/QE = .6       P/QE = 8.302906E-02
Q/QE = .8       P/QE = 1.7313075E-02
```

```
STIFFENER NUMBER 9
STIFFENER DIMENSIONS ARE:

A= 1.53        B= .18        H= .43        TF= .02        TW= .007

H/A = .2810458                H/TW = 61.42857                B/TF = 9.000001
    TF/TW = 2.857143

Q/QE = 0        P/QE = .4862934
Q/QE = .2       P/QE = .3858706
Q/QE = .4       P/QE = .1973095
Q/QE = .6       P/QE = 7.246771E-02
Q/QE = .8       P/QE = .0151842
```

TIFFENER NUMBER 10
TIFFENER DIMENSIONS ARE:

= 1.53 B= .045 H= .43 TF= .01 TW= .007

/A = .2810458 H/TW = 61.42857 B/TF = 4.500001
TF/TW = 1.428571

/QE = 0 P/QE = .7481851
./QE = .2 P/QE = .5737043
:/QE = .4 P/QE = .27031
:/QE = .6 P/QE = 9.959802E-02
)/QE = .8 P/QE = 2.065203E-02

STIFFENER NUMBER 11
STIFFENER DIMENSIONS ARE:

A= 1.53 B= 9.000001E-02 H= .43 TF= .02 TW= .007

H/A = .2810458 H/TW = 61.42857 B/TF = 4.500001
TF/TW = 2.857143

Q/QE = 0 P/QE = .5866173
Q/QE = .2 P/QE = .4580151
Q/QE = .4 P/QE = .2287983
Q/QE = .6 P/QE = 8.302906E-02
Q/QE = .8 P/QE = 1.751379E-02

STIFFENER NUMBER 12
STIFFENER DIMENSIONS ARE:

A= 1.53 B= .18 H= .43 TF= .04 TW= .007

H/A = .2810458 H/TW = 61.42857 B/TF = 4.500001
TF/TW = 5.714286

Q/QE = 0 P/QE = .575654
Q/QE = .2 P/QE = .450172
Q/QE = .4 P/QE = .2253905
Q/QE = .6 P/QE = 8.186716E-02
Q/QE = .8 P/QE = 1.700274E-02

```
TIFFENER NUMBER 13
TIFFENER DIMENSIONS ARE:

= 3.059        B= 0            H= .16          TF= 0           TW= .0064

/A = 5.230468E-02              H/TW = 25       B/TF = 1.701412E+38          TF/TW = 0

/QE = 0        P/QE = 2.[illegible]9223
/QE = .2       P/QE = 1.430977
/QE = .4       P/QE = .606607
/QE = .6       P/QE = .2031103
/QE = .8       P/QE = 4.[illegible]E-02
```

```
TIFFENER NUMBER 14
TIFFENER DIMENSIONS ARE:

= 1.33         B= 0            H= .16          TF= 0           TW= .0064

/A = .1045752                  H/TW = 25       B/TF = 1.701412E+38          TF/TW = 0

/QE = 0        P/QE = 2.[illegible]4545
/QE = .2       P/QE = 1.395785
/QE = .4       P/QE = .6003201
/QE = .6       P/QE = .2024085
/QE = .8       P/QE = 4.[illegible]E-02
```

```
STIFFENER NUMBER 15
STIFFENER DIMENSIONS ARE:

= .765         B= 0            H= .16          TF= 0           TW= .0064

/A = .2091503                  H/TW = 25       B/TF = 1.701412E+38          TF/TW = 0

/QE = 0        P/QE = 1.[illegible]729
/QE = .2       P/QE = 1.328096
/QE = .4       P/QE = .5879563
/QE = .6       P/QE = .2010115
/QE = .8       P/QE = 4.[illegible]E-02
```

REFERENCES

(1) Timoshenko, S., and J. Gere, "Theory of Elastic Stablity" 2nd ed., McGraw-Hill Book Co., 1961.

(2) Williams, N., and W.M. Lucas, Jr. "Structural Analysis for Engineers", McGraw-Hill Book Co., 1978.

(3) Hildebrand, F.B., "Advanced Calculus for Application" 2nd.ed., Prentice-Hall, Inc., 1976.

(4) Gradshteyn, I.S., and I.M. Ryzhik "Table of Integrals, Series, and Products", Academic Press, 1980.

(5) Brush, Don O., and Bo. O. Almroth "Buckling of Bars, Plates, and Shells", McGraw-Hill, Inc., 1975.

(6) "Introduction to BASIC", Digital Equipment Corporation, 1978.

DUDLEY KNOX LIBRARY
NAVAL ATE SCHOOL
MONTEREY CA 93943-5101

AMERICAN BINDERIES

thesK58373
Torsional buckling of I beam and flat ba
3 2768 000 65080 8
DUDLEY KNOX LIBRARY